

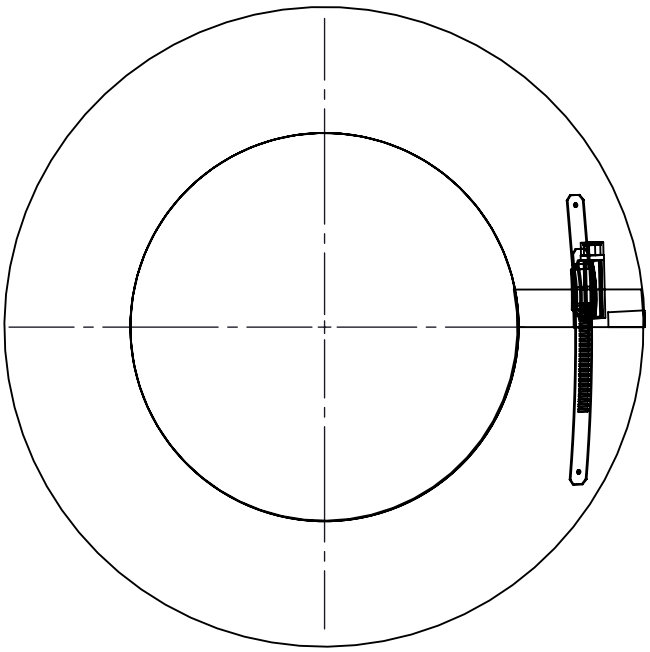

Ø200 M 1:10



Ø	080	100	110	115	120	130	140	150	160	180	200	225	250	300	350	400	450	500	550	600
B	145	165	175	180	185	195	205	215	225	245	265	290	315	365	415	465	515	565	615	665
kg	0,3								0,4				0,5		0,6		0,7		0,8	0,9

notes:
ENCD

DIN ISO 13920 Tolerances B

revisions-no.

	date	name
drawn by	12.09.20	MSA
checked by	12.09.20	SWA
approved by	12.09.20	JWY
modified by		

jeremias® CHIMNEY SYSTEMS

description: Storm collar with edge

code: **DW 307 ∅**

drawing-no.: **01-02-20-5451-000**

scale: 1:5

format: A4

sheet: 1 of 1

© jeremias GmbH. All rights reserved, also regarding any disposal, exploitation, editing, distribution, as well as in the event of applications for industrial property rights.