P < 0 Pa

600°C

Ö, G

F

32 mm

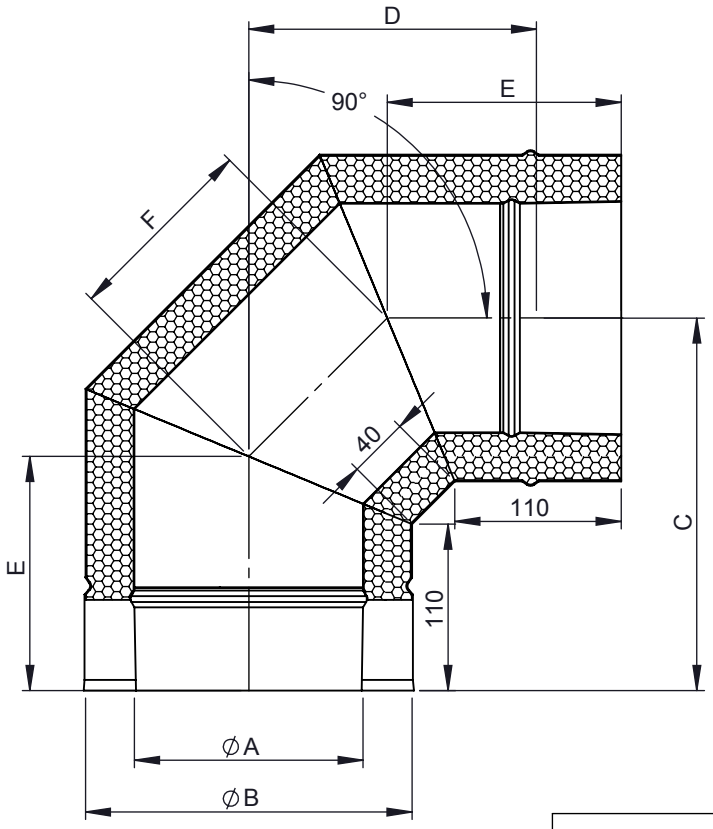

M 1:8 (Ø150)

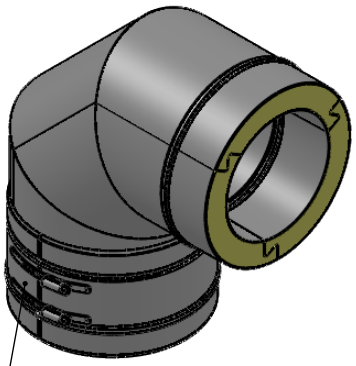

inkl. Systemklemmband

Ø	80	100	110	115	120	130	150	160	180	200	225	250	300	350	400	450	500	550	600
A	80	100	110	115	120	130	150	160	180	200	225	250	300	350	400	450	500	550	600
B	145	165	175	180	185	195	215	225	245	265	290	315	365	415	465	515	565	615	665
C	211	221	226	229	231	236	246	251	261	271	284	296	321	346	371	396	421	446	471
D	155	165	170	173	175	180	190	195	205	215	228	240	265	290	315	340	365	390	415
E	140	144	146	148	149	151	155	157	161	165	170	175	186	196	207	217	227	238	248
F	100	109	113	115	117	121	129	134	142	150	161	171	192	212	233	254	274	295	316
kg	2,21	2,71	2,96	3,1	3,22	3,49	4,04	4,33	4,93	5,57	6,4	7,28	9,19	12,36	14,91	17,63	20,62	23,79	27,21

notes:

DIN ISO 13920 Tolerances B

revisions-no. A1 | mm / kg

	date	name
drawn by	13.12.2017	KAB
checked by		
approved by		
modified by		

jeremias CHIMNEY SYSTEMS

description: Winkel 90° starr

code: **DWKL60**

drawing-no.: **01-02-10-6250-000**

scale: 1:5

format: A4

sheet: 1 of 1

© jeremias GmbH. All rights reserved, also regarding any disposal, exploitation, editing, distribution, as well as in the event of applications for industrial property rights.