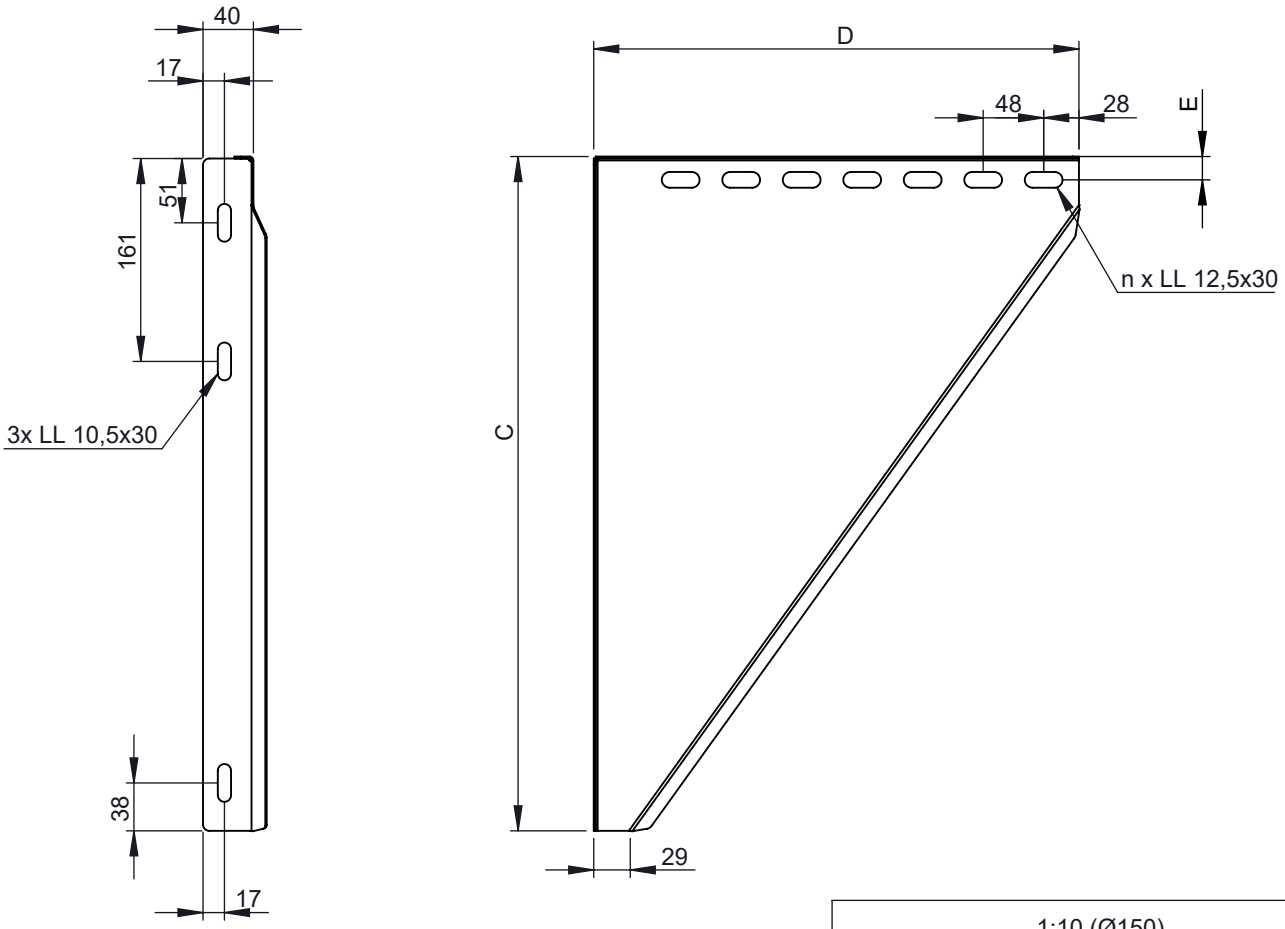

1:10 (Ø150)

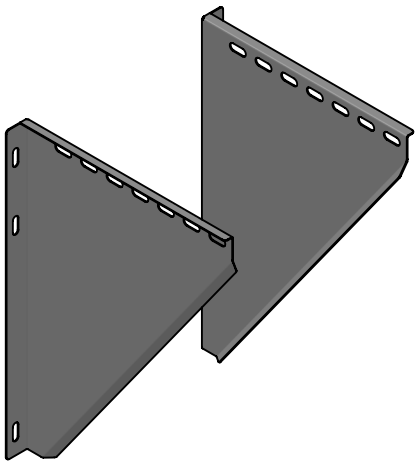

1x right bending
1x left bending
includes a set of screws with nuts (6 pcs)

Ø	80	100	110	115	120	130	140	150	160	180	200	225	250	300	350	400	450	500	550	600
C	500							535		565	615				665		715	765	865	
D	365							385		415	435		485	535	585	635	685	735	785	835
E	18,5														19					
n	7									8			9	10	11	12	14			17
t	1,5																	2		
kg	3,2	3,2	3,2	3,2	3,2	3,2	3,2	3,5	3,5	3,9	4,4	4,4	4,8	5,2	8	8,6	9,8	11,1	13,2	14

notes:
ENCD

DIN ISO 13920 Tolerances B

revisions-no. A2

mm / kg

	date	name
drawn by	26.09.20	JMA
checked by	26.09.20	SWA
approved by	26.09.20	JWY
modified by		

jeremias® CHIMNEY SYSTEMS

description: Adjustable wall brackets 150 - 250 mm

code: **DW02**

drawing-no.: **01-02-20-0051-000**

scale: 1:6

format: A4

sheet: 1 of 1

© jeremias GmbH. All rights reserved, also regarding any disposal, exploitation, editing, distribution, as well as in the event of applications for industrial property rights.