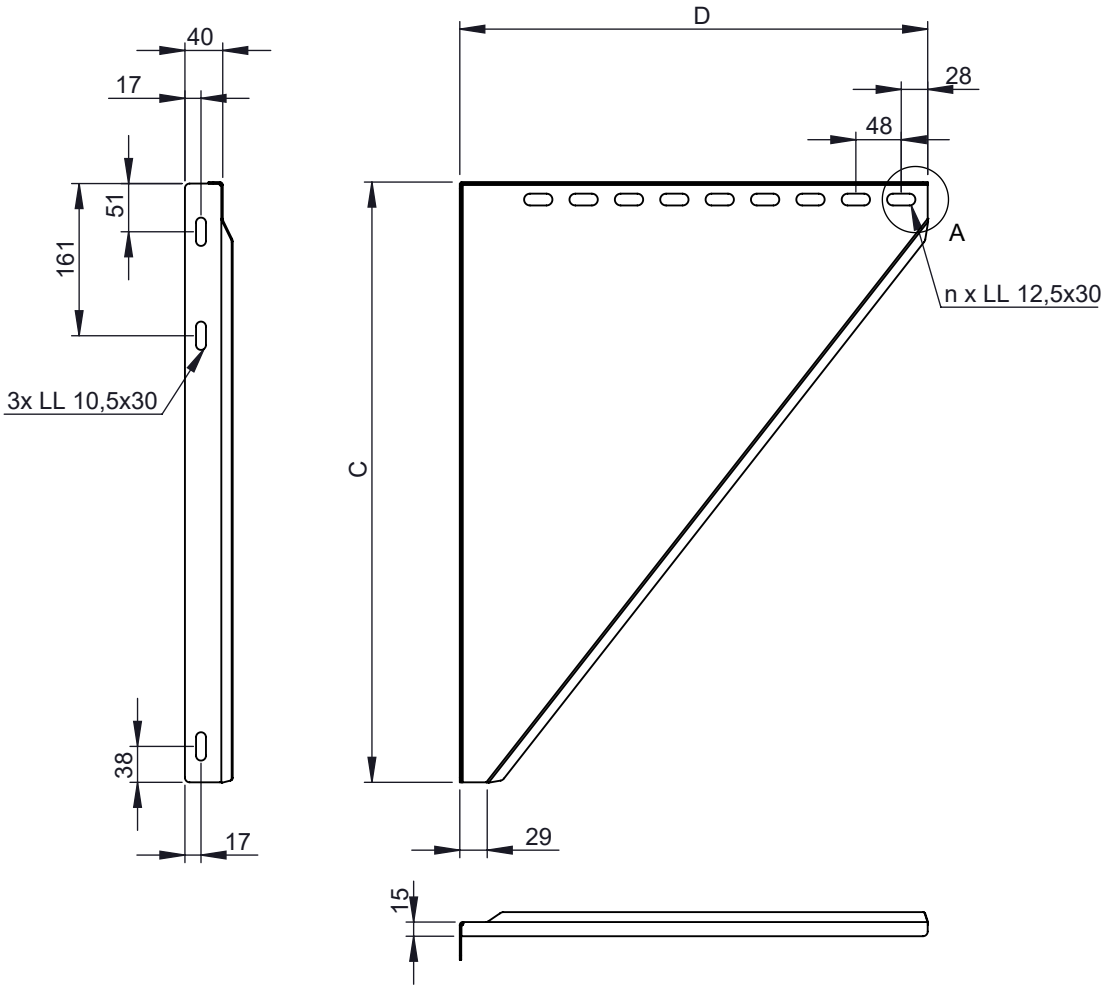

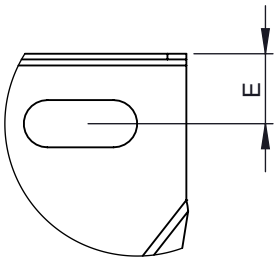

DETAILA (1 : 2)

M 1:15 (Ø150)

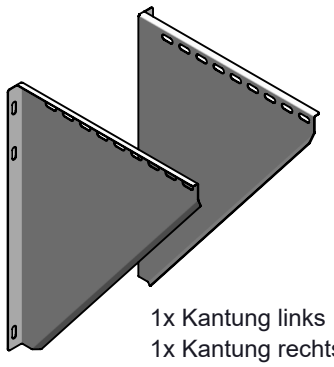

1x Kantung links
1x Kantung rechts

Ø	80	100	110	115	120	130	140	150	160	180	200	225	250
C	600							635		665			715
D	475							495		525	545		595
E	18,5												
n	9									10	11		12
t	1,5												
kg	4,6	4,6	4,6	4,6	4,6	4,6	4,6	5,1	5,1	5,5	5,7	5,7	6,6

notes:

DIN ISO 13920 Tolerances B

revisions-no. A2 | mm / kg

	date	name
drawn by	17.04.2018	FBA
checked by		
approved by		
modified by	22.10.2018	FBA

jeremias® CHIMNEY SYSTEMS

description: Konsolbleche, verstellbar
von 250 - 360mm
bis Ø250

code: **DW49**

drawing-no.: **01-02-20-0052-000**

scale: 1:8

format: A4

sheet: 1 of 2

© jeremias GmbH. All rights reserved, also regarding any disposal, exploitation, editing, distribution, as well as in the event of applications for industrial property rights.

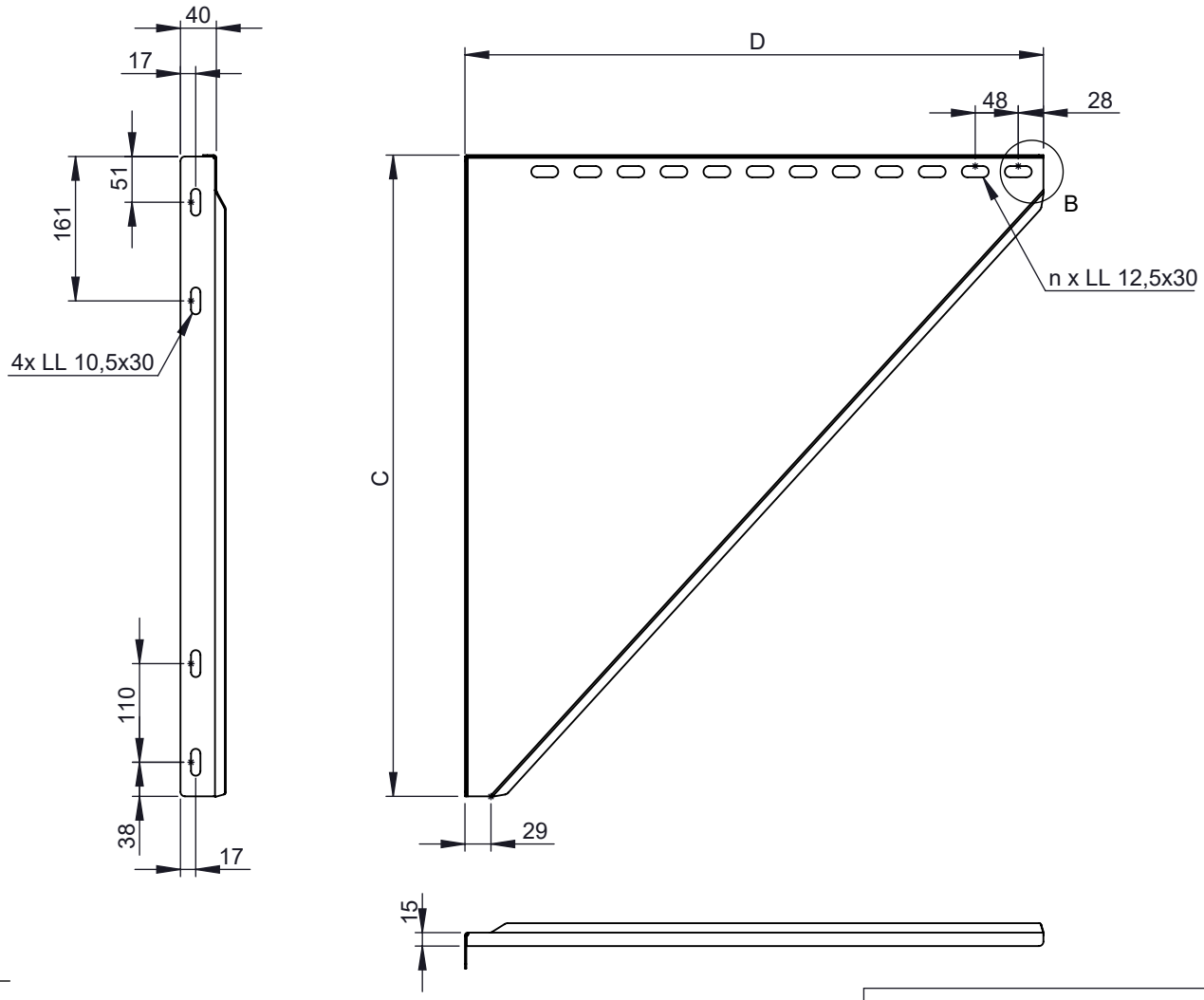

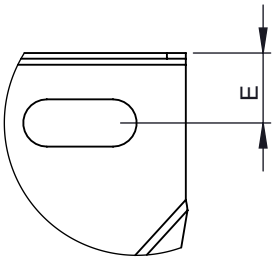

DETAILB (1 : 2)

M 1:15 (Ø300)

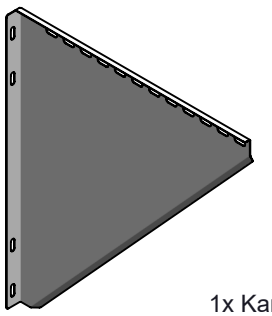

1x Kantung links
1x Kantung rechts

Ø	300	350	400	450	500	550	600
C	715	765		815	865	965	
D	645	695	745	795	845	895	945
E	18,5				19		
n	13	14	15	16	17	18	19
t	1,5				2		
kg	7	8	8,5	9,5	14,2	16,5	17,3

notes:

DIN ISO 13920 Tolerances B

revisions-no. A2 | mm / kg

	date	name
drawn by	17.04.2018	FBA
checked by		
approved by		
modified by	22.10.2018	FBA

jeremias® CHIMNEY SYSTEMS

description: Konsolbleche, verstellbar
von 250 - 360mm
ab Ø300

code: **DW49**

drawing-no.: **01-02-20-0052-000**

scale: 1:8

format: A4

sheet: 2 of 2

© jeremias GmbH. All rights reserved, also regarding any disposal, exploitation, editing, distribution, as well as in the event of applications for industrial property rights.