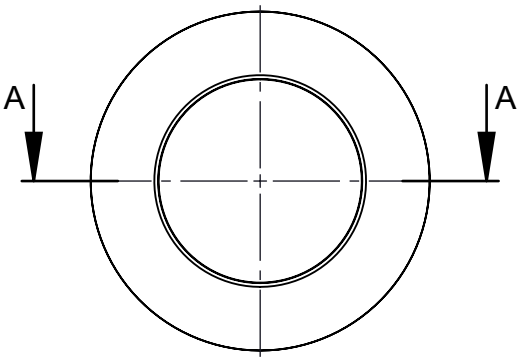

Section A-A

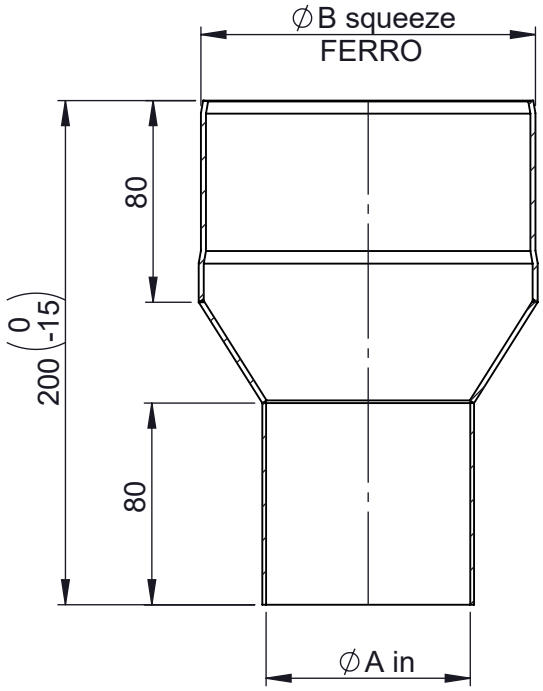

Attention [Uwaga]
Ferro x...0 - not painted [element niemalowany]
1 - SENOTHERM 702.284 black [czarny]
2 - SENOTHERM 702.310 black-metalic [czarny metalik]
3 - SENOTHERM 702.288 gray [szary]
4 - SENOTHERM 800.820 light-gray [jasno szary]

∅	130/ 140	130/ 150	130/ 160	130/ 180	130/ 200	140/ 150	140/ 160	150/ 160	150/ 170	150/ 180	150/ 200	150/ 250	160/ 180	160/ 200	180/ 200	180/ 250	200/ 225	200/ 250
A	Sheet 2	Sheet 2	Sheet 2	130		Sheet 2	Sheet 2	Sheet 2	Sheet 2	Sheet 2	150		Sheet 2	Sheet 2	Sheet 2	180	200	
B				180	200						200	250				250	225	250
kg	1,1	1,2	1,3	1,4	1,6	1,2	1,3	1,4	1,4	1,5	1,6	2,1	1,5	1,6	1,7	1,8	1,9	1,9

∅	80/ 120	80/ 130	80/ 150	80/ 160	100/ 120	100/ 130	100/ 150	110/ 130	110/ 150	115/ 130	115/ 150	120/ 125	120/ 130	120/ 140	120/ 150	120/ 160	120/ 180	120/ 200	125/ 130	125/ 150
A	80				100			110		Sheet 2	115	Sheet 2	Sheet 2	Sheet 2	Sheet 2	120			Sheet 2	Sheet 2
B	120	130	150	160	120	130	150	130	150		150					160	180	200		
kg	1	1	1,1	1,2	1	1	1,2	1,1	1,2	1	1,1	1	1,1	1,1	1,2	1,2	1,3	1,5	1,1	1,2

notes:
ENCD

DIN ISO 13920 Tolerances B

revisions-no. 01

mm / kg

	date	name
drawn by	12.04.24	KOS
checked by	12.04.24	JAD
approved by	12.04.24	JWY
modified by		

jeremias® CHIMNEY SYSTEMS

description: Increaser

code: **FERRO-EX∅**

drawing-no.: **06-01-3370-000**

scale: 1:10

format: A4

sheet: 1 of 2

© jeremias GmbH. All rights reserved, also regarding any disposal, exploitation, editing, distribution, as well as in the event of applications for industrial property rights.

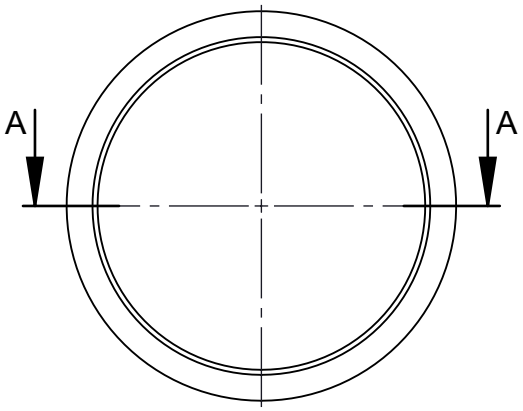

Section A-A

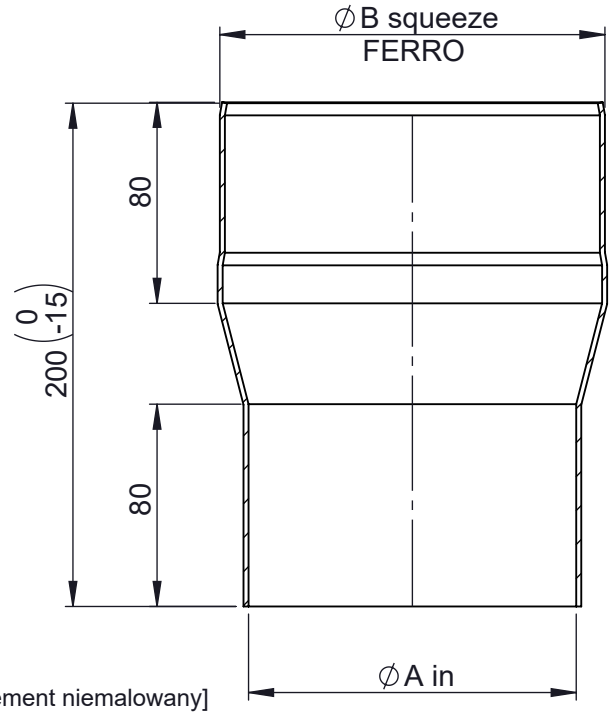

Attention [Uwaga]
Ferro x...
- 0 - not painted [element niemalowany]
- 1 - SANOTHERM 702.284 black [czarny]
- 2 - SANOTHERM 702.310 black-metalic [czarny metalik]
- 3 - SANOTHERM 702.288 gray [szary]
- 4 - SANOTHERM 800.820 light-gray [jasno szary]

∅	130/ 140	130/ 150	130/ 160	130/ 180	130/ 200	140/ 150	140/ 160	150/ 160	150/ 170	150/ 180	150/ 200	150/ 250	160/ 180	160/ 200	180/ 200	180/ 250	200/ 225	200/ 250
A	130			Sheet 1	Sheet 1	140		150			Sheet 1	Sheet 1	160		180	Sheet 1	Sheet 1	Sheet 1
B	140	150	160			150	160	160	170	180			180	200	200			
kg	1,1	1,2	1,3	1,4	1,6	1,2	1,3	1,4	1,4	1,5	1,6	2,1	1,5	1,6	1,7	1,8	1,9	1,9

∅	80/ 120	80/ 130	80/ 150	80/ 160	100/ 120	100/ 130	100/ 150	110/ 130	110/ 150	115/ 130	115/ 150	120/ 125	120/ 130	120/ 140	120/ 150	120/ 160	120/ 180	120/ 200	125/ 130	125/ 150
A	Sheet 1	Sheet 1	Sheet 1	Sheet 1	Sheet 1	Sheet 1	Sheet 1	Sheet 1	Sheet 1	115	Sheet 1	120				Sheet 1	Sheet 1	Sheet 1	125	
B										130		125	130	140	150				130	150
kg	1	1	1,1	1,2	1	1	1,2	1,1	1,2	1	1,1	1	1,1	1,1	1,2	1,2	1,3	1,5	1,1	1,2

notes:
ENCD

DIN ISO 13920 Tolerances B

revisions-no. 01 | mm / kg

	date	name
drawn by	12.04.24	KOS
checked by	12.04.24	JAD
approved by	12.04.24	JWY
modified by		

jeremias® CHIMNEY SYSTEMS

description: Increaser

code: **FERRO-EX∅**

drawing-no.: **06-01-3370-000**

scale: 1:10

format: A4

sheet: 2 of 2

© jeremias GmbH. All rights reserved, also regarding any disposal, exploitation, editing, distribution, as well as in the event of applications for industrial property rights.