Possible type of female part "FU"

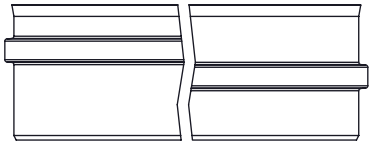

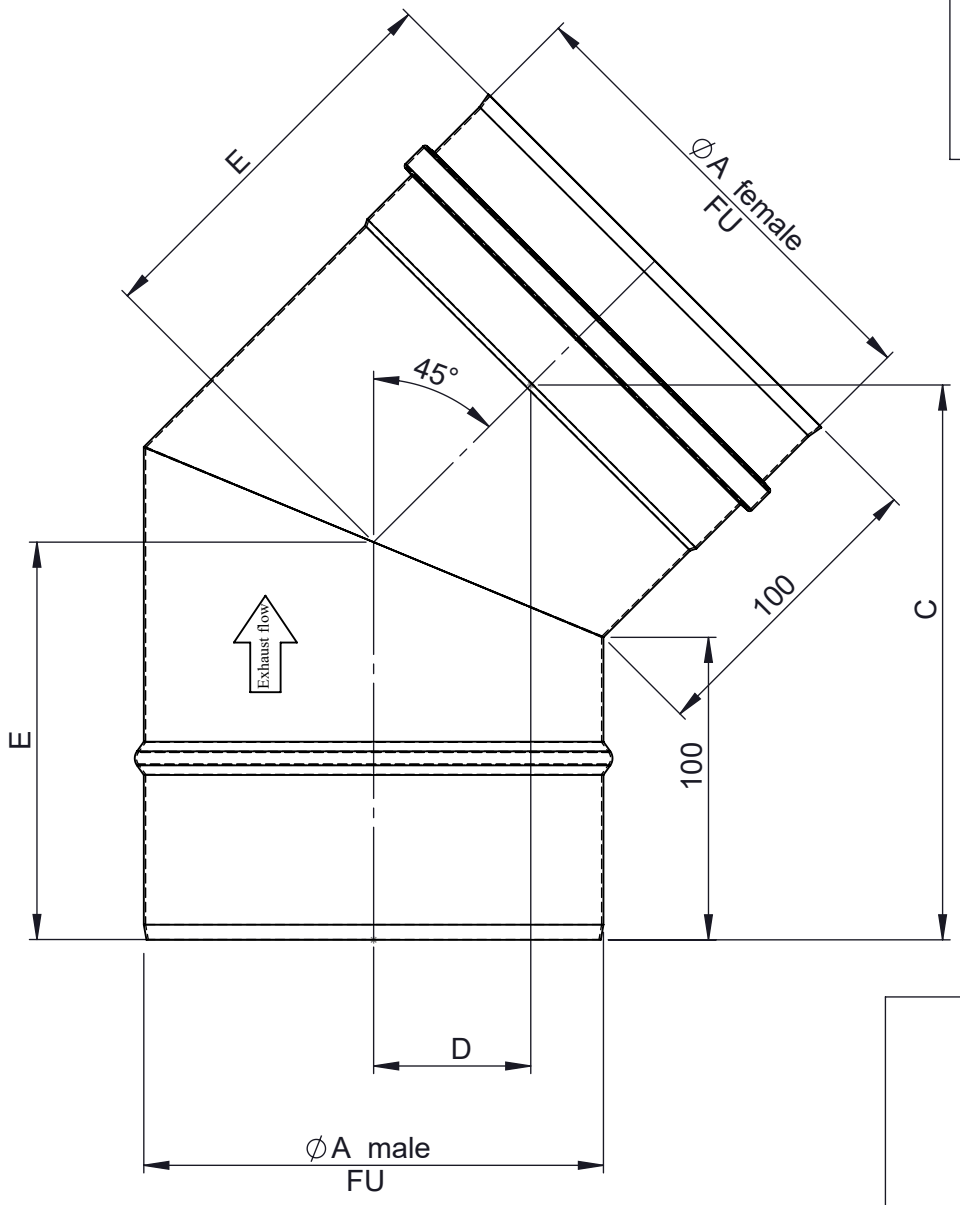

M 1:10 (Ø150)

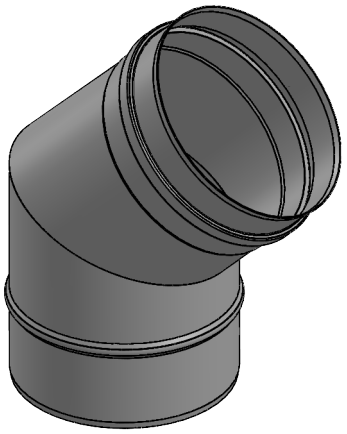

∅	060	080	090	100	110	115	120	125	130	140	150	160	180	200	225	250	300	350	400	450	500	550	600
A	60	80	90	100	110	115	120	125	130	140	150	160	180	200	225	250	300	350	400	450	500	550	600
C	152	159	163	166	170	171	173	175	177	180	184	187	195	201	210	219	237	254	272	290	308	325	343
D	39	42	44	45	47	47	48	49	50	51	53	54	57	60	64	67	74	82	89	96	104	111	118
E	112	117	119	121	123	124	125	126	127	129	131	133	138	142	147	152	162	173	183	193	204	214	224
kg	0,2	0,3	0,3	0,4	0,4	0,4	0,5	0,5	0,5	0,6	0,6	0,7	0,8	0,9	1	1,2	1,5	2,5	3	3,6	4,2	4,8	5,5

notes:
ENCD

DIN ISO 13920 Tolerances B

revisions-no. A | mm / kg

	date	name
drawn by	10.10.20	AKO
checked by	10.10.20	SWA
approved by	10.10.20	JWY
modified by	10.11.21	AKO

jeremias® CHIMNEY SYSTEMS

description: Elbow 45° (TIG welded)

code: **FU19**

drawing-no.: **01-20-6100-000**

scale: 1:2.5

format: A4

sheet: 1 of 1

© jeremias GmbH. All rights reserved, also regarding any disposal, exploitation, editing, distribution, as well as in the event of applications for industrial property rights.