

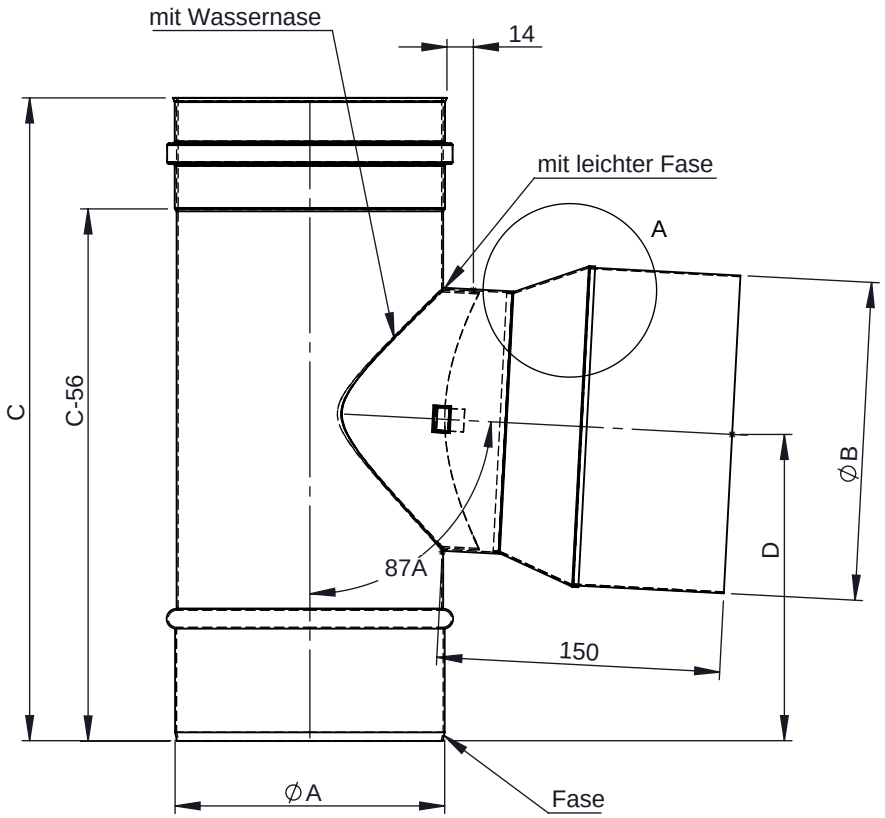

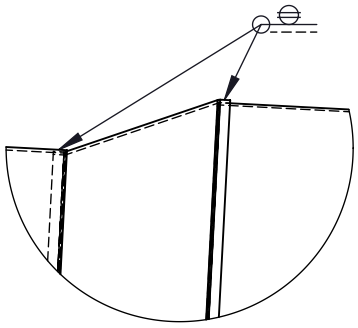

A (1 : 2)

M 1:8 (Ï 150)

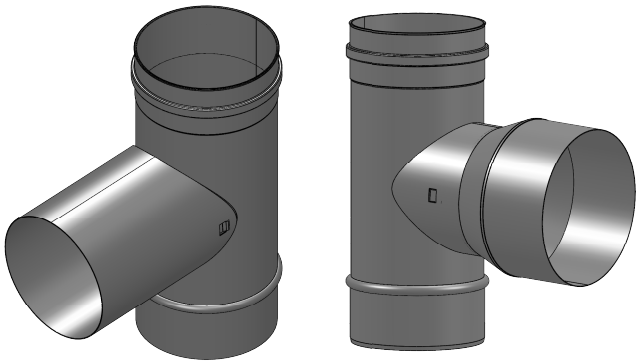

Ï	80	100	110	115	120	130	140	150	160	180	200	225	250	300	350
A	80	100	110	115	120	130	140	150	160	180	200	225	250	300	350
B	nach Kundenwunsch														
C	280	300	310	315	320	330	340	350	360	380	400	425	450	500	550
D	132	142	147	149	152	157	162	167	172	182	192	204	217	242	267
t	0,6														

material: inside/outside 1.4404 (316L)	surface: inside/outside 2B (3C)	DIN ISO 13920 Tolerances B	jeremias® CHIMNEY SYSTEMS	scale 1:4
		revisions-no. A5 / mm / kg		format A4
notes:		date / name	description T-Klix 87Ámit Wassernase, Abgang I=150mm	sheet 1 of 1
		drawn by 11.12.2012 JGR		
		checked by RS	code **EW-FU 49**	
		approved by		
		modified by 04.07.2018 JGR	drawing-no. **01-20-2255-000**	

É jeremias GmbH. All rights reserved, also regarding any disposal, exploitation, editing, distribution, as well as in the event of applications for industrial property rights.