AFRISO

Technik für Umweltschutz

Messen. Regeln. Überwachen.

Operating instructions

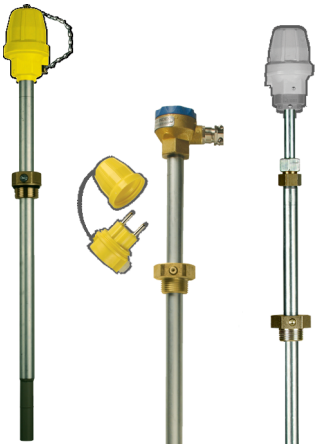

Level sensor for outdoor tanks

GWG 23

Type: GWG 23-Ro
Type: GWG 23-Wa
Type: GWG 23-T

Copyright 2023 AFRISO-EURO-INDEX GmbH. All rights reserved.

Lindenstraße 20
74363 Güglingen
Telephone +49 7135 102-0
Service +49 7135 102-211
Telefax +49 7135 102-147
info@afriso.com
www.afriso.com

0123

Version: 09.2023.0
ID: 900.000.0134

1 About these operating instructions

The operating instructions describe the level sensor "GWG 23-Ro / GWG 23-Wa / GWG 23-T" (also referred to as "product" in these operating instructions). These operating instructions are part of the product.

- You may only use the product if you have fully read and understood these operating instructions.
- Verify that these operating instructions are always accessible for any type of work performed on or with the product.
- Pass these operating instructions as well as all other product-related documents on to all owners of the product.
- If you feel that these operating instructions contain errors, inconsistencies, ambiguities or other issues, contact the manufacturer prior to using the product.

These operating instructions are protected by copyright and may only be used as provided for by the corresponding copyright legislation. We reserve the right to modifications.

The manufacturer shall not be liable in any form whatsoever for direct or consequential damage resulting from failure to observe these operating instructions or from failure to comply with directives, regulations and standards and any other statutory requirements applicable at the installation site of the product.

2 Information on safety

2.1 Safety messages and hazard categories

These operating instructions contain safety messages to alert you to potential hazards and risks. In addition to the instructions provided in these operating instructions, you must comply with all directives, standards and safety regulations applicable at the installation site of the product. Verify that you are familiar with all directives, standards and safety regulations and ensure compliance with them prior to using the product.

Safety messages in these operating instructions are highlighted with warning symbols and warning words. Depending on the severity of a hazard, the safety messages are classified according to different hazard categories.

NOTICE

NOTICE indicates a hazardous situation, which, if not avoided, can result in equipment damage.

2.2 Intended use

The product is a part of a control chain for overfill alarm systems. The product is safety-related equipment intended to prevent overfilling of tanks.

The product may only be used for the following media and tanks.

Media

- Fuel oil EL as per DIN 51603-1 and as per DIN SPEC 51603-6 with 0 - 100 % fatty acid methyl ester (FAME) as per EN 14214
- Diesel fuel as per EN 590 with up to 7 % fatty acid methyl ester (FAME) as per EN 14214
- Biodiesel with up to 100 % fatty acid methyl ester (FAME) as per EN 14214
- Paraffinic fuels (HVO/GTL as per DIN/TS 51603-8) proportionally with 0 - 100 %

The product with the **yellow** fitting for pipe mounting or wall mounting may also be used for the following media:

- Petrol as per EN 228

Tanks

- Aboveground or underground indoor or outdoor tanks (for example, manhole), with the exception of battery tanks.

Only the level sensors "GWG 23-Ro / GWG 23-Wa“ with the yellow fitting for pipe mounting or wall mounting have an approval for Ex zone 0 and may be connected to intrinsically safe circuits in Ex zone 0.

Any use other than the application explicitly permitted in these operating instructions is not permitted and causes hazards.

Verify that the product is suitable for the application planned by you prior to using the product. In doing so, take into account at least the following:

- All directives, standards and safety regulations applicable at the installation site of the product
- All conditions and data specified for the product
- The conditions of the planned application

In addition, perform a risk assessment in view of the planned application, according to an approved risk assessment method, and implement the appropriate safety measures, based on the results of the risk assessment. Take into account the consequences of installing or integrating the product into a system or a plant.

When using the product, perform all work and all other activities in conjunction with the product in compliance with the conditions specified in the operating instructions and on the nameplate, as well as with all directives, standards and safety regulations applicable at the installation site of the product.

2.3 Predictable incorrect application

The product must not be mounted in protective pipes or dip stick pipes.

The product with the **grey** fitting for pipe mounting or wall mounting must never be used in the following cases and for the following purposes:

- Hazardous area (EX)
  - If the product is operated in hazardous areas, sparks may cause deflagrations, fires or explosions

2.4 Qualification of personnel

This product may only be mounted, commissioned, maintained and decommissioned by a qualified, specialised company which has all required certifications and which meets the following requirements:

- Compliance with all directives, standards and safety regulations concerning handling of water-polluting substances as applicable at the installation site of the product.
- In Germany: Certification as per § 62 "Verordnung über Anlagen zum Umgang mit wassergefährdenden Stoffen" (AwSV) (Ordinance on Installations for Handling Water-Polluting Substances).

Only qualified persons who have comprehensive knowledge in the area of fire protection and explosion protection including the applicable regulatory requirements may work with the product on tanks containing liquids with a flash point of ≤ 55 °C.

Only appropriately trained persons who are familiar with and understand the contents of these operating instructions and all other pertinent product documentation are authorized to work on and with this product.

These persons must have sufficient technical training, knowledge and experience and be able to foresee and detect potential hazards that may be caused by using the product.

All persons working on and with the product must be fully familiar with all directives, standards and safety regulations that must be observed for performing such work.

2.5 Personal protective equipment

Always wear the required personal protective equipment. When performing work on and with the product, take into account that hazards may be present at the installation site which do not directly result from the product itself.

2.6 Modifications to the product

Only perform work on and with the product which is explicitly described in these operating instructions. Do not make any modifications to the product which are not described in these operating instructions.

3 Transport and storage

The product may be damaged as a result of improper transport or storage.

NOTICE

INCORRECT HANDLING

- Verify compliance with the specified ambient conditions during transport or storage of the product.
- Use the original packaging when transporting the product.
- Store the product in a clean and dry environment.
- Verify that the product is protected against shocks and impact during transport and storage.

Failure to follow these instructions can result in equipment damage.

4 Product description

Depending on the type, the product consists of the following components:

"GWG 23-Ro"“and "GWG 23-T"

- Probe
- Screw fitting G1
- GWG level sensor connection fitting

"GWG 23-Wa":

- Probe
- Screw fitting G1
- Probe head
- Fitting for wall mounting (**yellow**)

A protected PTC thermistor is fitted at the bottom of the probe.

The chapter "Overview" shows the components of the product.

4.1 Overview

4.1.1 GWG 23-Ro

The product "GWG 23-Ro" features a connection fitting at the upper end of the probe tube.

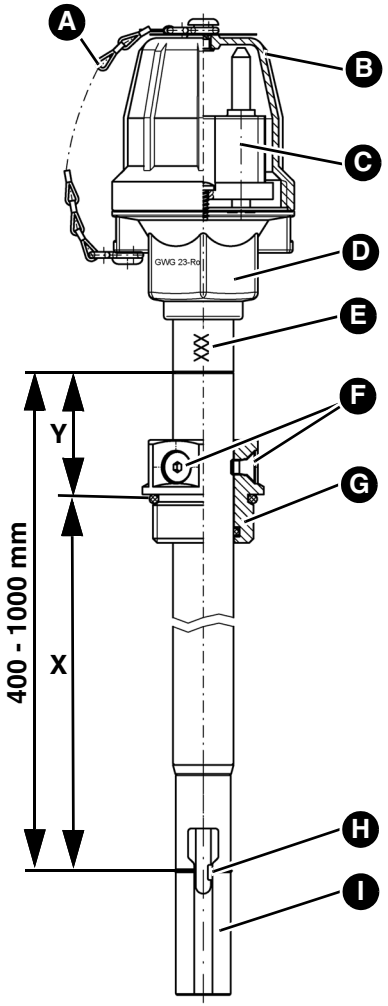

X = Adjustment dimension

Y = Check dimension

A. Strap (**grey** fitting) / chain strap (**yellow** fitting)

B. Cap

C. Flange plug, type 901

D. Fitting for pipe mounting, type 904

E. Probe tube 20 x 2 with embossed probe length: for example 400/500/700/1000 mm (special version up to 3000 mm)

F. Locking screws

G. Screw fitting G1

H. PTC thermistor and response point (mark)

I. Protective sleeve

4.1.2 GWG 23-Wa

The product "GWG 23-Wa" features a probe head at the upper end of the probe tube for connection of the fitting for wall mounting type 905 to the product.

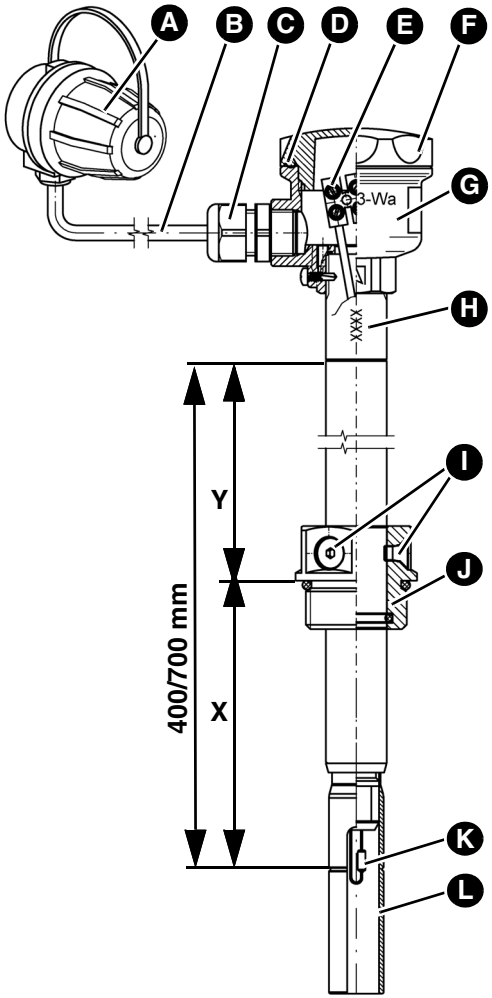

X = Adjustment dimension

Y = Check dimension

A. Fitting for wall mounting type 905

B. Connection line (not included in scope of delivery)

C. Cable gland with strain relief

D. O ring

E. Terminal strip

F. Cover

G. Probe head (junction box)

H. Probe tube 20 x 2 with embossed probe length: for example 400/700 mm (special version up to 3000 mm)

I. Locking screws

J. Screw fitting G1

K. PTC thermistor and response point (mark)

L. Protective sleeve

4.1.3 GWG 23-T

The product "GWG 23-T" features a movable connection fitting for height adjustment (telescope) at the upper end of the probe tube.

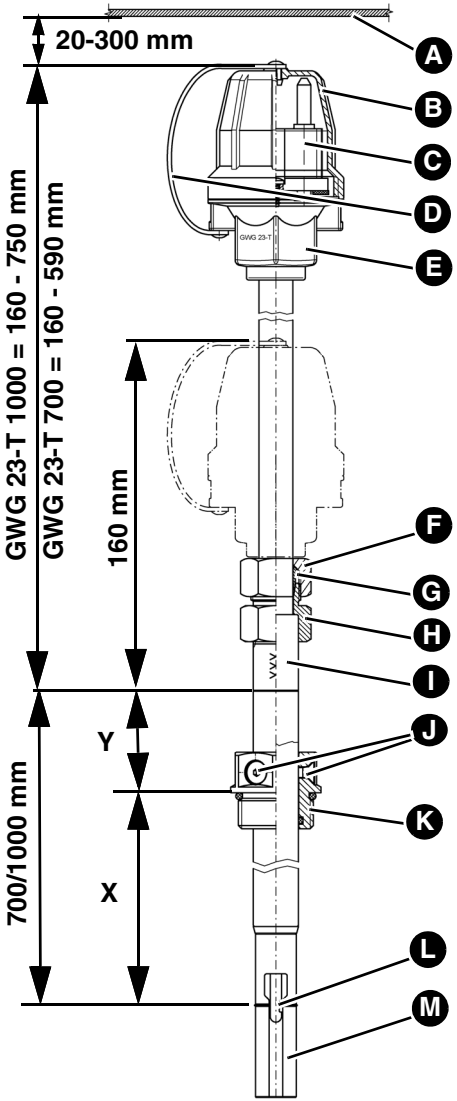

X = Adjustment dimension

Y = Check dimension

A. Manhole cover

B. Cap

C. Flange plug, type 901

D. Strap

E. Fitting for pipe mounting, type 904

F. Union nut

G. Compression ring

H. Screw connection body

I. Probe tube 20 x 2 with embossed probe length: 700/1000 mm

J. Locking screws

K. Screw fitting G1

L. PTC thermistor and response point (mark)

M. Protective sleeve

4.2 Application example(s)



4.3 Function

The product is electrically connected to the filling device of the tank vehicle. This connection heats up PTC thermistor which releases the filling process. If the level in the tank is high enough for the medium to reach the PTC thermistor, it changes its resistance. The control unit of the tank vehicle closes the shut-off valve and filling is stopped.

4.4 Approvals, conformities, certifications

The product "GWG 23-Ro / GWG 23-Wa / GWG 23-T" complies with:

- EMC Directive (2014/30/EU)
- Construction Products Directive (EU) No. 305/2011 and No. 574/2014
- RoHS Directive (2011/65/EU)

The product "GWG 23-Ro / GWG 23-Wa" with the **yellow** fitting for pipe mounting or wall mounting additionally complies with:

- ATEX Equipment Directive (2014/34/EU)
  The marking of these products is: II 1G Ex ia IIB T3 Ga and
  II 1/2G Ex ia IIB T3 Ga/Gb

4.5 Technical data

Parameter	Value
General specifications	
Probe length	100 mm, 150 mm, 250 mm, 400 mm, 500 mm, 700 mm, 1000 mm
	Special version from 100 mm up to max. 3000 mm
Inductance (externally effective)	Negligibly small
Capacitance (externally effective)	Negligibly small
Connection data	The level sensor many only be connected to an interface as per EN 16657
Degree of protection	IP 68 (without cap and fitting for wall mounting for version GWG-23-Wa)
Ambient conditions	
Ambient temperature operation	-25 ... 60 °C
Temperature of the medium	-25 ... 50 °C

Table 1: Technical data

5 Mounting

5.1 Preparing mounting

If the filling line is longer than 20 m, do not determine the adjustment dimension **X** on the basis of the adjustment tables, but take into account the special conditions.

The adjustment dimensions **X** specified take into a account a manhole socket height of 100 mm for tanks according to EN 12285-1/12285-2/DIN 6618/6608 and 60 mm for tanks according to DIN 6619 as well as a total thickness of the manhole cover including the seal of 20 mm.

- In the case of a different height of the manhole, correct the adjustment dimension **X** according to the deviation.
- Install the level sensor vertically. It must always be installed in the tank from the manhole cover or the tank top.

5.2 Mounting the product

In the case of underground tanks, the distance between the upper edge of the connection fitting and the lower edge of the manhole cover must be at least 20 mm and no more than 300 mm.

1. Determine the adjustment dimension **X** and the check dimension **Y** as per chapter "Determining adjustment dimension X".
2. Loosen the locking screws at the screw fitting.
3. Set the adjustment dimension **X** between the reference edge of the manhole cover or the screw fitting (take into account the thickness of the seal) and the marking groove at the protective sleeve.
4. Tighten the locking screws.
5. Screw the screw fitting with the product into the tank socket (with seal).
6. Check correct installation of the product via the check dimension **Y**.
7. Mount the fitting for wall mounting (type -Wa) directly next to the filling connection of the tank.

   The fitting can be mounted on a plane wall with dowels or next to the filling opening using a console.
   - A clip is used to mount the console to the filling pipe.
   - As an alternative, the connection can be made with a GWG filler cap.

5.3 Electrical connection GWG 23-Wa

⇨ Verify that the transition into the manhole is gas-tight in the case of tanks for petrol.

⇨ Verify that the transition into the manhole is liquid-tight in the case of tanks for diesel fuel and fuel oil.

⇨ If you use the filler cap (figure 1), verify that the cable connection is approximately 10 cm longer than the chain strap.
- This results in a strain relief when the cable of the tank vehicle is connected.

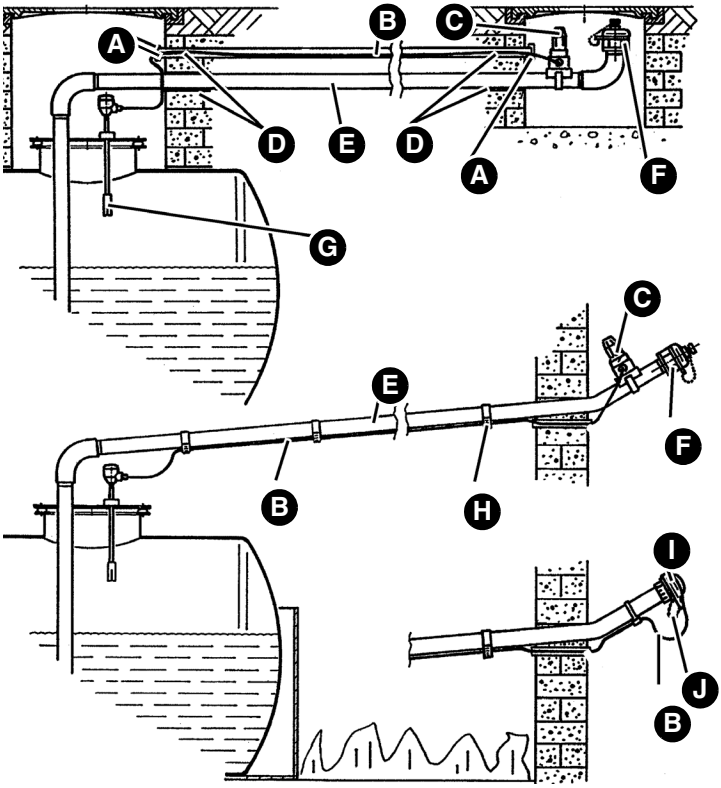

A. Transition, liquid-tight
B. Connection cable
C. Fitting for wall-mounting, type 905, on console, fastened to filling line or manhole wall by means of a clamp
D. Transition, gas-tight or liquid-tight
E. Permanently installed filling line
F. Filler cap
G. Level sensors
H. Cable tie
I. Filler cap with connection for level sensor (only for diesel fuel and fuel oil EL)
J. Chain strap

Fig. 1: Examples of aboveground or underground line installation

1. Connect the product and the fitting for wall mounting with moisture-proof cable H05VV-F.
   - Minimum wire cross section 2 x 1 mm², maximum cable length 100 m.
   - Alternative: wire cross section 2 x 1.5 mm², maximum cable length 150 m.
2. Strip the wire ends by a maximum of 10 mm.
3. Screw the cable gland with strain relief into the probe head.
4. Connect the wire with the brown insulation or the wire with the black insulation of the cable to one of the two free terminals in the probe head.
5. Connect the wire with the blue insulation of the cable to the remaining free terminal in the probe head.
6. Tighten the union nut of the cable gland until the cable is sufficiently fastened.
7. Screw the cover with the inserted O ring into the probe head.
8. Connect the wire with the brown or black insulation of the cable to the "+" terminal in the fitting for wall mounting.
9. Connect the wire with the blue insulation of the cable to the "-" terminal in the fitting for wall mounting.
10. Use suitable equipment to verify correct electrical installation.
11. Document the installation of the product, see chapter "Certificate of specialised company".

5.4 Determining adjustment dimension X

If a leak protection lining is mounted, you must add 30 mm to adjustment dimension **X**.

- Document this in the form "Certificate of specialised company".

The probe can be adjusted as follows:

Probe length [mm]	Min. X [mm]	Max. X [mm]
100	70	80
150	70	130
250	70	230
400	70	380
500	70	480
700	70	680
1000	70	980
Up to 3000	70	Nominal length - 20

Table 2: Adjustment dimension of the probe

5.4.1 Vertical tanks

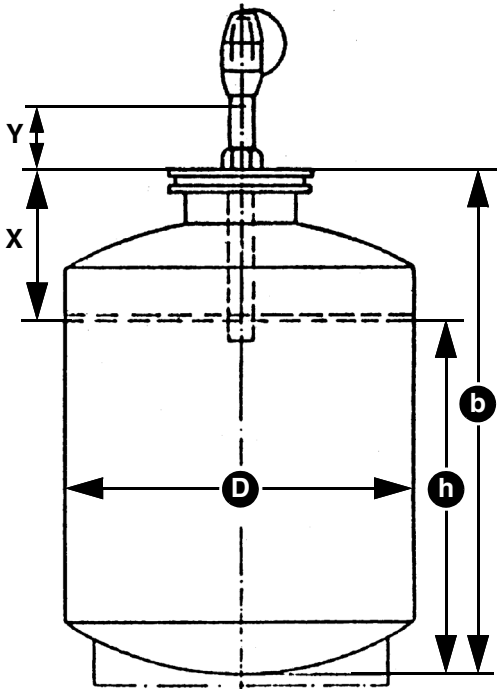

X = Adjustment dimension (b – h)

Y = Check dimension

h = Response level

b = Measured distance between tank bottom and upper edge manhole cover

D = Diameter

Tank type	See adjustment table ...	Page ...
As per DIN 6619:1968-07, permissible filling degree 97 % (V/V)	11	33
As per DIN 6619:1981-10, DIN 6619:1982-09 and DIN 6619:1989-09, permissible filling degree 97 % (V/V)	12	33
As per DIN 6623	13	34
As per DIN 6618	14	34/35

Table 3: Overview adjustment tables for vertical tanks

5.4.2 Cylindrical horizontal tanks

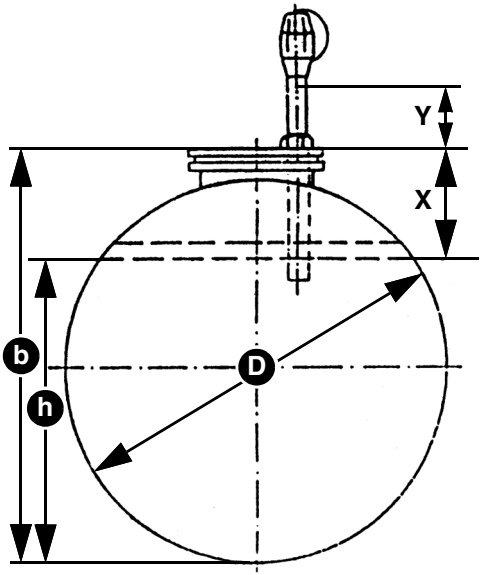

X = Adjustment dimension (b – h)

Y = Check dimension

h = Response level

b = Measured distance between tank bottom and upper edge manhole cover

D = Diameter

Tank type	See adjustment table ...	Page ...
As per DIN 6608-1 and DIN 6608-2 (ÖNORM C 2110) with ≥ 0.3 m earth cover, permissible filling degree 97 % (V/V)	5	20/21
As per DIN 6608-1 and DIN 6608-2 (ÖNORM C 2110) with < 0.3 m earth cover and as per DIN 6616 / DIN 6617 (ÖNORM C 2115 / ÖNORM C 2118), permissible filling degree 95 % (V/V)	6	22/23

Table 4: Overview adjustment tables for horizontal tanks

Tank type	See adjustment table ...	Page ...
As per EN 12285-1 and EN 12285-2, permissible filling degree 95 % (V/V)	7	24-26
As per EN 12285-1 and EN 12285-2, permissible filling degree 97 % (V/V)	8	27-29
As per EN 12285-1 and EN 12285-2, permissible filling degree 98 % (V/V)	9	30-32
As per DIN 6624	10	32/33

Table 4: Overview adjustment tables for horizontal tanks

5.4.3 Adjustment tables

Tank Ø [mm]	Volume of tank/tank compartment [m³]	Response level h [mm]	Adjustment dimension X [mm]	Check dimension Y [mm] at probe length			
				400	500	700	1000
1000	1	795	320	80	180	380	680
1250	1	990	375	25	125	325	625
	3	1095	270	130	230	430	730
1600	2	1355	360	40	140	340	640
	3	1395	320	80	180	380	680
	5	1430	285	115	215	415	715
	7	1440	275	125	225	425	725
	10	1455	260	140	240	440	740
	13	1460	255	145	245	445	745
	16	1465	250	150	250	450	750

Table 5: Underground cylindrical, vertical tanks as per DIN 6608 with ≥ 0.3 m earth cover

Tank Ø [mm]	Volume of tank/tank compartment [m³]	Response level h [mm]	Adjustment dimension X [mm]	Check dimension Y [mm] at probe length			
				400	500	700	1000
2000	5	1775	340	60	160	360	660
	7	1795	320	80	180	380	680
	10	1815	300	100	200	400	700
	13	1820	295	105	205	405	705
	16	1825	290	110	210	410	710
	20	1830	285	115	215	415	715
	25	1835	280	120	220	420	720
	30	1840	275	125	225	425	725
2500	10	2255	360	40	140	340	640
	20	2285	330	70	170	370	670
	25	2290	325	75	175	375	675
	30	2295	320	80	180	380	680
	40	2300	315	85	185	385	685
	50	2305	310	90	190	390	690
	60						
2900	20	2645	365	35	135	335	635
	40	2665	345	55	155	355	655
	50						
	60	2670	340	60	160	360	660
	80						
	100	2675	335	65	165	365	665

Table 5: Underground cylindrical, vertical tanks as per DIN 6608 with ≥ 0.3 m earth cover

Tank Ø [mm]	Volume of tank/tank compart-ment [m³]	Response level h [mm]	Adjust-ment dimen-sion X [mm]	Check dimension Y [mm] at probe length			
				400	500	700	1000
1000	1	775	340	60	160	360	660
1250	1	965	400	0	100	300	600
	3	1065	300	100	200	400	700
1600	2	1320	395	5	105	305	605
	3	1355	360	40	140	340	640
	5	1385	330	70	170	370	670
	7	1400	315	85	185	385	685
	10	1410	305	95	195	395	695
	13	1415	300	100	200	400	700
	16	1420	295	105	205	405	705
2000	5	1725	390	10	110	310	610
	7	1745	370	30	130	330	630
	10	1760	355	45	145	345	645
	13	1765	350	50	150	350	650
	16	1770	345	55	155	355	655
	20	1775	340	60	160	360	660
	25	1780	335	65	165	365	665
	30	1785	330	70	170	370	670

Table 6: Underground cylindrical, vertical tanks with < 0.3 m earth cover

Tank Ø [mm]	Volume of tank/tank compart-ment [m³]	Response level h [mm]	Adjust-ment dimen-sion X [mm]	Check dimension Y [mm] at probe length			
				400	500	700	1000
2500	10	2185	430	-	70	270	570
	20	2215	400	0	100	300	600
	25	2220	395	5	105	305	605
	30	2225	390	10	110	310	610
	40	2230	385	15	115	315	615
	50						
	60	2235	380	20	120	320	620
2900	20	2560	450	-	50	250	550
	40	2585	425	-	75	275	575
	50						
	60	2590	420	-	80	280	580
	80						
	100	2595	415	-	85	285	585

Table 6: Underground cylindrical, vertical tanks with < 0.3 m earth cover

Note on adjustment dimensions for tanks as per EN 12285-1 and EN 12285-2:

- Respect all directives, standards and safety regulations applicable at the installation site with regard to the permissible filling degree.
- The adjustment dimensions X in the tables were calculated for class C tanks. In the case of class A and class B tanks with a lesser material thickness of the manhole cover, the difference in material thickness may be subtracted from the table values for the adjustment dimension.
- If a tank diameter is not contained in the tables, you can use the adjustment dimension for the next greater tank diameter if the tank volume is identical.
- If a tank volume is not contained in the tables, you can use the adjustment dimension for the next lower tank volume if the tank diameter is identical.

Tank Ø [mm]	Volume tank/ compartment [m³]	Response level h [mm]	Adjustment dimension X [mm]	Check dimension Y [mm] at probe length			
				400	500	700	1000
900	1	660	355	45	145	345	645
1000	1	730	385	15	115	315	615
1250	1	910	455	-	45	245	545
	1.5	970	395	5	105	305	605
	2	1005	360	40	140	340	640
	3	1040	325	75	175	375	675

Table 7: Cylindrical vertical tanks as per EN 12285-1 and EN 12285-2 with permissible filling degree 95 % (V/V)

Tank Ø [mm]	Volume tank/ compart-ment [m³]	Response level h [mm]	Adjust-ment dimen-sion X [mm]	Check dimension Y [mm] at probe length			
				400	500	700	1000
1600	2	1280	435	-	65	265	565
	2.5	1310	405	-	95	295	595
	3	1325	390	10	110	310	610
	4	1350	365	35	135	335	635
	5	1370	345	55	155	355	655
	7	1385	330	70	170	370	670
	10	1400	315	85	185	385	685
	13	1405	310	90	190	390	690
	16	1410	305	95	195	395	695
1900	4	1595	420	-	80	280	580
	5	1620	395	5	105	305	605
	7	1640	375	25	125	325	625
	10	1660	355	45	145	345	645
	13	1670	345	55	155	355	655
	15	1675	340	60	160	360	660
	20	1680	335	65	165	365	665
	25	1685	330	70	170	370	670
	30	1690	325	75	175	375	675

Table 7: Cylindrical vertical tanks as per EN 12285-1 and EN 12285-2 with permissible filling degree 95 % (V/V)

Tank Ø [mm]	Volume tank/ compart-ment [m³]	Response level h [mm]	Adjust-ment dimen-sion X [mm]	Check dimension Y [mm] at probe length			
				400	500	700	1000
2000	4	1675	440	-	60	260	560
	5	1700	415	-	85	285	585
	7	1725	390	10	110	310	610
	10	1745	370	30	130	330	630
	13	1755	360	40	140	340	640
	15	1760	355	45	145	345	645
	16						
	20	1765	350	50	150	350	650
	25	1770	345	55	155	355	655
	30	1775	340	60	160	360	660
2500	5	2100	515	-	-	185	485
	10	2170	445	-	55	255	555
	15	2195	420	-	80	280	580
	20	2205	410	-	90	290	590
	25	2215	400	0	100	300	600
	30	2220	395	5	105	305	605
	40	2225	390	10	110	310	610
	50	2230	385	15	115	315	615
	60						

Table 7: Cylindrical vertical tanks as per EN 12285-1 and EN 12285-2 with permissible filling degree 95 % (V/V)

Tank Ø [mm]	Volume tank/ compart-ment [m³]	Response level h [mm]	Adjust-ment dimen-sion X [mm]	Check dimension Y [mm] at probe length			
				400	500	700	1000
2900	10	2500	510	-	-	190	490
	20	2550	460	-	40	240	540
	30	2565	445	-	55	255	555
	40	2575	435	-	65	265	565
	50	2580	430	-	70	270	570
	60	2585	425	-	75	275	575
	80						
	100	2590	420	-	80	280	580
3000	10	2580	530	-	-	170	470
	20	2635	475	-	25	225	525
	30	2655	455	-	45	245	545
	40	2665	445	-	55	255	555
	50	2670	440	-	60	260	560
	60						
	80	2675	435	-	65	265	565
	100	2680	430	-	70	270	570

Table 7: Cylindrical vertical tanks as per EN 12285-1 and EN 12285-2 with permissible filling degree 95 % (V/V)

Tank Ø [mm]	Volume tank/ compart-ment [m³]	Response level h [mm]	Adjust-ment dimen-sion X [mm]	Check dimension Y [mm] at probe length			
				400	500	700	1000
900	1	675	340	60	160	360	660
1000	1	750	365	35	135	335	635
1250	1	930	435	-	65	265	565
	1.5	995	370	30	130	330	630
	2	1030	335	65	165	365	665
	3	1070	295	105	205	405	705
1600	2	1315	400	0	100	300	600
	2.5	1340	375	25	125	325	625
	3	1360	355	45	145	345	645
	4	1390	325	75	175	375	675
	5	1410	305	95	195	395	695
	7	1425	290	110	210	410	710
	10	1440	275	125	225	425	725
	13	1450	265	135	235	435	735
	16	1455	260	140	240	440	740
1900	4	1640	375	25	125	325	625
	5	1665	350	50	150	350	650
	7	1690	325	75	175	375	675
	10	1710	305	95	195	395	695
	13	1720	295	105	205	405	705
	15	1725	290	110	210	410	710
	20	1730	285	115	215	415	715
	25	1735	280	120	220	420	720
	30	1740	275	125	225	425	725

Table 8: Cylindrical vertical tanks as per EN 12285-1 and EN 12285-2 with permissible filling degree 97 % (V/V)

Tank Ø [mm]	Volume tank/ compart-ment [m³]	Response level h [mm]	Adjust-ment dimen-sion X [mm]	Check dimension Y [mm] at probe length			
				400	500	700	1000
2000	4	1720	395	5	105	305	605
	5	1750	365	35	135	335	635
	7	1775	340	60	160	360	660
	10	1795	320	80	180	380	680
	13	1805	310	90	190	390	690
	15	1815	300	100	200	400	700
	16	1820	295	105	205	405	705
	20	1825	290	110	210	410	710
	25	1830	285	115	215	415	715
	30	1835	280	120	220	420	720
2500	5	2160	455	-	45	245	545
	10	2240	375	25	125	325	625
	15	2260	355	45	145	345	645
	20	2275	340	60	160	360	660
	25	2285	330	70	170	370	670
	30	2290	325	75	175	375	675
	40	2295	320	80	180	380	680
	50	2300	315	85	185	385	685
	60						

Table 8: Cylindrical vertical tanks as per EN 12285-1 and EN 12285-2 with permissible filling degree 97 % (V/V)

Tank Ø [mm]	Volume tank/ compart-ment [m³]	Response level h [mm]	Adjust-ment dimen-sion X [mm]	Check dimension Y [mm] at probe length			
				400	500	700	1000
2900	10	2580	430	-	70	270	570
	20	2635	375	25	125	325	625
	30	2650	360	40	140	340	640
	40	2660	350	50	150	350	650
	50	2665	345	55	155	355	655
	60						
	80	2670	340	60	160	360	660
	100						
3000	10	2660	450	-	50	250	550
	20	2720	390	10	110	310	610
	30	2740	370	30	130	330	630
	40	2750	360	40	140	340	640
	50	2755	355	45	145	345	645
	60						
	80	2760	350	50	150	350	650
	100	2765	345	55	155	355	655

Table 8: Cylindrical vertical tanks as per EN 12285-1 and EN 12285-2 with permissible filling degree 97 % (V/V)

Tank Ø [mm]	Volume of tank/tank compart-ment [m³]	Response level h [mm]	Adjust-ment dimen-sion X [mm]	Check dimension Y [mm] at probe length			
				400	500	700	1000
1000	1.0	780	215	185	285	485	785
	1.5	815	180	220	320	520	820
	2.0	835	160	240	340	540	840
	3.0	855	140	260	360	560	860
1250	2.0	1040	205	195	295	495	795
	3.0	1065	180	220	320	520	820
	3.5	1075	170	230	330	530	830
	5.0	1085	160	240	340	540	840

Table 9: Horizontal, cylindrical tanks as per DIN 6624

Tank Ø [mm]	Volume of tank/tank compart-ment [m³]	Response level h [mm]	Adjust-ment dimen-sion X [mm]	Check dimension Y [mm] at probe length			
				400	500	700	1000
1250	1.7	1325	230	170	270	470	770
1600	2.8	1375	215	185	285	485	785
	3.8	1850	240	160	260	460	760
	5.0	2430	275	125	225	425	725
2000	6.0	1910	240	160	260	460	760

Table 10: Vertical, cylindrical tanks as per DIN 6619:1968-07

Tank Ø [mm]	Volume of tank/tank compart-ment [m³]	Response level h [mm]	Adjust-ment dimen-sion X [mm]	Check dimension Y [mm] at probe length			
				400	500	700	1000
2000	5.0	1500	385	15	115	315	615
	7.0	2145					
2500	11.5	2240	460	-	40	240	540
2900	15.0	2230	505	-	-	195	495

Table 11: Vertical, cylindrical tanks as per DIN 6619:1981-10, DIN 6619:1982-09 and DIN 6619:1989-09

Tank Ø [mm]	Volume of tank/tank compart-ment [m³]	Response level h [mm]	Adjust-ment dimen-sion X [mm]	Check dimension Y [mm] at probe length			
				400	500	700	1000
1000	0.4	420	215	185	285	485	785
	0.6	665	230	170	270	470	770
	0.8	910	245	155	255	455	755
1250	0.995/1.0	780	205	195	295	495	795

Table 12: Vertical tanks as per DIN 6623

Tank Ø [mm]	Volume of tank/tank compart-ment [m³]	Response level h [mm]	Adjust-ment dimen-sion X [mm]	Check dimension Y [mm] at probe length		
				500	700	1000
1600	5	2535	390	110	310	610
	7	3405	440	60	260	560
	10	4935	520	-	180	480
	13	6465	600	-	100	400

Table 13: Vertical, cylindrical tanks as per DIN 6618

Tank Ø [mm]	Volume of tank/tank compart-ment [m³]	Response level h [mm]	Adjust-ment dimen-sion X [mm]	Check dimension Y [mm] at probe length		
				500	700	1000
2000	10	3095	420	80	280	580
	13	4080	475	25	225	525
	16	4985	520	-	180	480
	20	6465	600	-	100	400
	25	7965	680	-	20	320
2500	20	4135	490	10	210	510
	25	5115	540	-	160	460
	30	6170	600	-	100	400
	40	8200	705	-	-	295
2900	30	4584	525	-	175	475
	50	7810	695	-	5	305
	60	8435	755	-	-	245
	80	11940	915	-	-	85
	100	14980	1075	-	-	-

Table 13: Vertical, cylindrical tanks as per DIN 6618

5.4.4 Adjustment table for aboveground steel tanks

Height: 1.0 - 4.0 m

1. Measure the tank height "H".

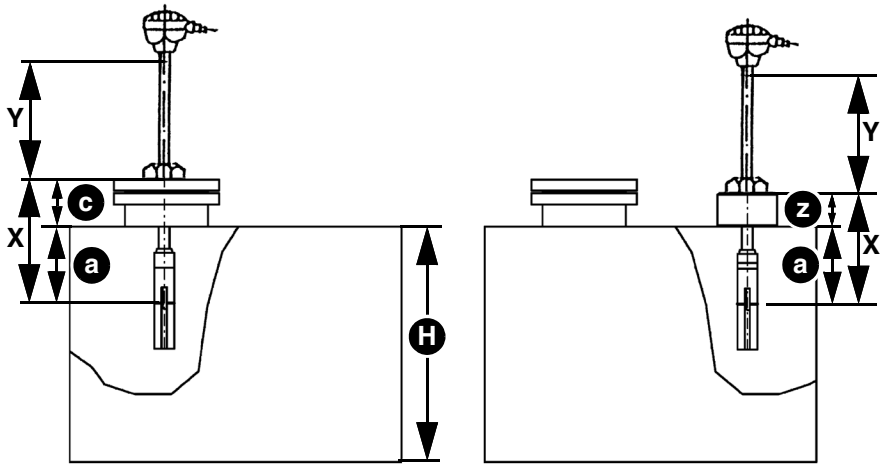

X = Adjustment dimension
a = Mounting dimension
Y = Check dimension
c = Auxiliary dimension
z = Socket length
H = Tank height

Fig. 2: Installation on manhole cover (left), installation on tank cover (right)

2. Determine the mounting dimension "a" from table 15.

Nominal volume V [m³]	Tank height H [m]							
	1.0	1.25	1.5	2.0	2.5	3.0	3.5	4.0
1.0	137	170	204	-	-	-	-	-
1.5	106	132	-	-	-	-	-	-
2.0	91	112	134	177	-	-	-	-
2.5	-	-	-	-	198	-	-	-
3.0	75	93	110	146	-	-	-	-

Table 14: Determining mounting dimension "a" [mm]

Nominal volume V [m³]	Tank height H [m]							
	1.0	1.25	1.5	2.0	2.5	3.0	3.5	4.0
3.5	71	87	104	137	172	205	-	-
4.0	72	89	105	139	174	208	-	-
5.0	66	82	97	128	-	-	222	-
6.0	62	77	91	121	151	182	-	-
8.0	-	-	84	112	-	-	-	-
10.0	55	68	80	106	133	158	184	209
15.0	51	63	75	99	123	147	171	195
20.0	50	61	72	95	119	142	164	187
30.0	48	59	69	91	114	136	158	180
40.0	48	59	70	92	116	138	160	182
50.0	-	-	-	-	114	-	-	-
60.0	47	58	67	90	-	134	155	176
80.0	-	57	-	88	110	-	-	-
100.0	-	-	66	87	109	130	151	172

Table 14: Determining mounting dimension "a" [mm]

3. Measure the auxiliary dimension "c" or the socket length "z" and enter the adjustment dimension **X** in accordance with the installation situation in table 16.
4. Determine the check dimension **Y** in accordance with the installation situation:

Probe length [mm]	Installation on manhole cover	Installation on tank cover
400 and 700	**X** = a + c = _____ mm	**X** = a + z = _____ mm
100	**Y** = 100 - **X** = ____ mm	**Y** = 100 - **X** = ____ mm
150	**Y** = 150 - **X** = ____ mm	**Y** = 150 - **X** = ____ mm

Table 15: Results table

Probe length [mm]	Installation on manhole cover	Installation on tank cover
250	**Y** = 250 - **X** = _____ mm	**Y** = 250 - **X** = _____ mm
400	**Y** = 400 - **X** = _____ mm	**Y** = 400 - **X** = _____ mm
500	**Y** = 500 - **X** = _____ mm	**Y** = 500 - **X** = _____ mm
700	**Y** = 700 - **X** = _____ mm	**Y** = 700 - **X** = _____ mm

Table 15: Results table

5.4.5 Adjustment table for tanks from Haase GmbH

Tank type	Tank capacity [l]	Adjustment dimension X [mm]	Check dimension Y [mm] at probe length			
			400	500	700	1000
Poly 25	2,500	300	100	200	400	700
Poly 32	3,500	330	70	170	370	670
Poly 35	3,500	370	30	130	300	430
Poly 50/51	5,000	435	-	65	265	565
Poly 52	5,000	365	35	135	335	635
Poly 61	6,000	320	80	180	380	680
Poly 75/76	7,500	435	-	65	265	565
Poly 81	8,000	400	-	100	300	600
Poly 82	8,000	390	-	110	310	610
Poly 101	10,000	400	-	100	300	600
Poly 102	10,000	410	-	90	290	590
Poly 131	13,000	435	-	65	265	565
Poly 132	13,000	430	-	70	270	570
Poly 151	15,000	435	-	65	265	565

Table 16: Adjustment table (Haase Tank GmbH)

Tank type	Tank capacity [l]	Adjustment dimension X [mm]	Check dimension Y [mm] at probe length			
			400	500	700	1000
Beku 5	5,000	595	-	-	105	405
Beku 5 A	5,000	435	-	65	265	565
Beku 7 A	7,500	435	-	65	265	565
Beku 10 A	10,000	400	-	100	300	600

Table 16: Adjustment table (Haase Tank GmbH)

5.4.6 Adjustment table for tanks from NAU TS GmbH & Co. KG

Tank capacity [m³]	Tank Ø [mm]	Adjustment dimension X [mm]	Check dimension Y [mm] at probe length			
			400	500	700	1000
4	1,970	324	76	176	376	676
5	2,130	350	50	150	350	650
6	2,260	371	29	129	329	629
8	2,500	396	4	104	304	604
10	2,680	418	-	82	282	582
12	2,840	433	-	67	267	567
14	2,990	452	-	48	248	548

Table 17: NAU tanks with year of manufacture 2003 and later with outside diameter 660 mm and fastening ring

5.4.7 Tanks as per DIN 4119

1. Measure length "l" of the wall.
2. Determine the response level "h" that corresponds to the permissible filling degree: h = l x 0.95.
3. Measure the vertical distance between the bottom edge of the screw fitting of the product and the upper edge of the tank wall (where the roof begins) to get auxiliary dimension "c".
4. Calculate the adjustment dimension **X**:
   b = l + c
   X = b - h

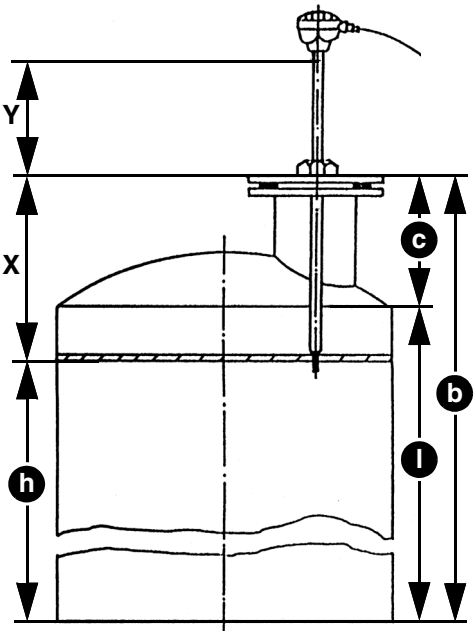

X = Adjustment dimension (b - h)

Y = Check dimension

h = Response level

l = Length (height) of the wall

c = Auxiliary dimension

b = Auxiliary dimension

*Fig. 3: Calculating the adjustment dimension **X***

6 Operation

6.1 Use in flood hazard areas

The product is suitable for use in flood hazard areas; it is watertight up to 10 mH_2O (1 bar pressure).

After a flood, the product does not have to be replaced.

NOTICE

INOPERABLE PRODUCT

- Verify that the fitting for wall mounting of "GWG 23-Wa" is replaced after a flood.

Failure to follow these instructions can result in equipment damage.

7 Maintenance

The product is safety-related equipment. Correct operation of the product must be verified at least every 10 year with a suitable tester.

7.1 Function test (maintenance)

During the function test, switching off and the switch-off time (≤ 1.5 s) must be tested.

1. Connect the tester and wait until the heat-up phase is terminated and filling is released.
2. Start the wet test and submerge the PTC thermistor into liquid.
3. Document the results of the function test in the "Report function test protection level sensor".
   - Visit www.afriso.com for the report.

8 Troubleshooting

Malfunctions may only be repaired by the manufacturer.

9 Decommissioning, disposal

Dispose of the product in compliance with all applicable directives, standards and safety regulations.



1. Dismount the product (see chapter "Mounting", reverse sequence of steps).
2. Dispose of the product.

10 Returning the device

Get in touch with us before returning your product (service@afriso.de).

11 Warranty

See our terms and conditions at www.afriso.com or your purchase contract for information on warranty.

12 Spare parts and accessories

NOTICE

UNSUITABLE PARTS

- Only use genuine spare parts and accessories provided by the manufacturer.

Failure to follow these instructions can result in equipment damage.

Product

Product designation	Part no.	Figure
Level sensor "GWG 23-Ro"	46009, 46013, 46115, 46116, 46117, 46118, 46119, 46121, 46123, 46125, 46126, 46127, 46185	
Level sensor "GWG 23-Wa"	46130, 46131, 46133	
Level sensor "GWG 23-T"	47622, 47623	

Spare parts and accessories

Product designation	Part no.	Figure
Cable extension fitting "KVA"	40041	-
GWG filler cap	20430	-
GWG level sensor fitting 905-W yellow	40052	

13 Appendix

13.1 Certificate of specialised company

I hereby confirm the installation of the level sensor according to these operating instructions.

Level sensor type: _____

Adjustment dimension **X** = _____ mm

O Installation with leak protection lining.

=> Adjustment dimension **X** + 30 mm = _____mm

(addition for leak protection lining).

Check dimension **Y** = _____mm

Tank manufacturer: _____

Tank type: _____ or

as per standard: _____

Approval no. of tank: _____

Factory no.:_____

Volume in litres: _____

Specialised company:

_____

_____

_____

Owner/operator:

_____

_____

_____

Location of system:

_____

_____

_____

_____

Date, signature

13.2 Spare parts delivery for systems with existing approval as per trade law

Assignment of old, existing approvals in the case of spare part deliveries.

13.2.1 NAU tanks

Tank size [l]	Type	Approval as per trade law	DIBt	See adjustment table ...
4,000 5,000 6,000	Single-walled	02/BAM/4.01/22/76 A 02/BAM/4.01/22/76 P	Z-40.11-66	20
8,000 10,000 12,000	Double-walled PTB no. III B/S 1627	02/BAM/3.10/4/81 A 02/BAM/3.10/4/81 P	-	20

Table 18: Glass-fibre reinforced spherical plastic tanks made by NAU, 85368 Moosburg, Germany, up to year of manufacture 2003 with outside diameter 580 mm and screw connection (14 bolts M10).

Tank capacity [m³]	Tank Ø [mm]	Adjustment dimension X [mm]	Check dimension Y [mm] at probe length			
			400	500	700	1000
4	1,970	295	105	205	405	705
5	2,130	305	95	195	395	695
6	2,260	315	85	185	385	685
8	2,500	335	65	165	365	665
10	2,680	350	50	150	350	650
12	2,840	365	35	135	335	635

Table 19: Glass-fibre reinforced spherical plastic tanks (single-walled/double-walled)

13.2.2 Betonwerk Hörsching

Tank type	Tank capacity [l]	Certification mark	See adjustment table ...
L 4000 L 6000 L 8000 L 10000 L 12000	4,000 6,000 8,000 10,000 12,000	PA-VI 364.002	22
LS 2500 LS 4000 LS 6000 LS 8000 LS 10000 LS 12000 LS 14000	2,500 4,000 6,000 8,000 10,000 12,000 14,000	PA-VI 314.001	22

Table 20: Betonwerk Hörsching, Leitl GmbH&Co. KG A4041 Linz/Donau, Austria, spherical tanks made of steel concrete

Tank type	Tank capacity [m^3]	Adjustment dimension X [mm]	Check dimension Y [mm] at probe length	
			700	1000
LS 2500	2.5	356	344	644
L/LS 4000	4	376	324	624
L/LS 6000	6	405	295	595
L/LS 8000	8	430	270	570
L/LS 10000	10	452	248	548
L/LS 12000	12	467	233	533
LS 14000	14	486	214	514

Table 21: Spherical tanks made of steel concrete

13.3 EU Type Examination Certificate

Valid for level sensors GWG 23-Ro / GWG 23-Wa (yellow fitting)

ZERTIFIKAT ◆ CERTIFICATE ◆ 認證證書 ◆ СЕРТИФИКАТ ◆ CERTIFICADO ◆ CERTIFICAT

Product Service

(1) **EU-Baumusterprüfbescheinigung**

(2) Geräte und Schutzsysteme zur bestimmungsmäßigen Verwendung in explosionsgefährdeten Bereichen – **Richtlinie 2014/34/EU**

(3) Nummer der EU-Baumusterprüfbescheinigung:

TPS 21 ATEX 015639 0017 X Ausgabe 00

(4) Gerät: Grenzwertgeber
Typ: GWG 23-Ro/-Wa

(5) Hersteller: AFRISO-EURO-INDEX GmbH

(6) Anschrift: Lindenstr. 20
74363 Güglingen
Deutschland

(7) Die Bauart dieses Produktes sowie die verschiedenen zulässigen Ausführungen sind in der Anlage und den darin aufgeführten Unterlagen zu dieser EU-Baumusterprüfbescheinigung festgelegt.

(8) Die TÜV SÜD Product Service GmbH bescheinigt als notifizierte Stelle Nr. 0123 nach Artikel 17 der Richtlinie 2014/34/EU des Europäischen Parlaments und des Rates der Europäischen Union vom 26. Februar 2014 die Erfüllung der grundlegenden Sicherheits- und Gesundheitsanforderungen für die Konzeption und den Bau von Geräten und Schutzsystemen zur bestimmungsgemäßen Verwendung in explosionsgefährdeten Bereichen gemäß Anhang II der Richtlinie. Die Ergebnisse der Prüfung sind in dem vertraulichen Prüfbericht 713207258 festgelegt.

(9) Die grundlegenden Sicherheits- und Gesundheitsanforderungen werden erfüllt durch Übereinstimmung mit:

EN IEC 60079-0:2018 **EN 60079-11:2012** **EN 60079-26:2016**

(10) Falls das Zeichen „X" hinter der Bescheinigungsnummer steht, wird auf besondere Bedingungen für die sichere Anwendung des Gerätes in der Anlage zu dieser Bescheinigung hingewiesen.

(11) Diese EU-Baumusterprüfung bezieht sich nur auf Konzeption und Bau des festgelegten Gerätes gemäß Richtlinie 2014/34/EU. Weitere Anforderungen dieser Richtlinie gelten für die Herstellung und das Inverkehrbringen dieses Gerätes.

(12) Die Kennzeichnung des Gerätes muss die folgenden Angaben enthalten:

II 1G Ex ia IIB T3 Ga
II 1/2G Ex ia IIB T3 Ga/Gb

Zertifizierstelle Explosionsschutz
Ridlerstraße 65, 80339 München

München, 30.06.2021

.....
Stefan Vierbücher

Seite 1 / 2

EU-Baumusterprüfbescheinigungen ohne Unterschrift haben keine Gültigkeit.
Diese EU-Baumusterprüfbescheinigungen darf nur unverändert weiterverbreitet werden.
Auszüge oder Änderungen bedürfen der Genehmigung von TÜV SÜD Product Service GmbH
Das Dokument wird intern unter der folgenden Nummer verwaltet: EX5A 015639 0017 Rev. 00

TÜV SÜD Product Service GmbH • Zertifizierstelle • Ridlerstraße 65 • 80339 München • Deutschland

TÜV®

ZERTIFIKAT ◆ CERTIFICATE ◆ 認證證書 ◆ СЕРТИФИКАТ ◆ CERTIFICADO ◆ CERTIFICAT

Product Service

(13) **Anlage**

(14) **EU-Baumusterprüfbescheinigung TPS 21 ATEX 015639 0017 X** Ausgabe 00

(15) Beschreibung des Gerätes

Bei diesem Gerät handelt es sich um einen Grenzwertgeber für den Einsatz in Bereichen mit explosionsfähiger Gasatmosphäre als Teil einer Abfüllsicherung für oberirdische und unterirdische drucklose und ortsfeste Tanks gemäß EN 13616-2 zur Lagerung von flüssigen Brenn- und Kraftstoffen gemäß EN 228, EN 590, EN 14214, DIN 51603-1 oder DIN SPEC 51603-6.

Das Gerät ist für die Zone 0 und zur Montage in der Tankwand zwischen den Zonen 0 und 1 ausgelegt und in der Zündschutzart „ia", Eigensicherheit ausgeführt.

Der Grenzwertgeber besteht aus einem Kaltleiterfühler, einem Sondenrohr, einem Einschraubkörper G1 mit Dichtringen und Feststellschrauben, sowie einer Anschlussarmatur und darf an geeigneten eigensicheren Stromkreisen eingesetzt werden.

Gerätevarianten:

GWG 23-Ro Anschlussarmatur (gelb) ist direkt am Schutzrohr der Sonde angebracht
GWG 23-Wa Sondenkopf (blau) am oberen Ende des Schutzrohrs zur Verbindung der Armatur für Wandmontage Typ 905

Der Bezeichnung folgt die Länge des Schutzrohrs in mm (Mindestlänge 400 mm)

Technische Daten :

Eigensichere Kennwerte

U_i	25	V
I_i	165	mA
P_i	1	W
C_i	vernachlässigbar	
L_i	vernachlässigbar	

Isolationsspannung

Zwischen Gehäuse und eigensicherem Stromkreis	500	VAC

Zulässiger Umgebungstemperaturbereich	-25 °C ≤ T_a ≤ +60 °C
Zulässiger Mediumstemperaturbereich	-25 °C ≤ T_{fluid} ≤ +50 °C

Für Strom-Schnittstellen gemäß EN 16657:2016+A1:2018, 5.4.3.3 geeignet

(16) Prüfbericht 713207258

(17) Besondere Bedingungen für die Verwendung

Umgebungstemperaturbereich (Siehe technische Daten)

(18) Grundlegende Sicherheits- und Gesundheitsanforderungen:

Durch die unter (9) aufgeführten Normen abgedeckt.

EU-Baumusterprüfbescheinigungen ohne Unterschrift haben keine Gültigkeit.
Diese EU-Baumusterprüfbescheinigungen darf nur unverändert weiterverbreitet werden.
Auszüge oder Änderungen bedürfen der Genehmigung von TÜV SÜD Product Service GmbH
Das Dokument wird intern unter der folgenden Nummer verwaltet: EX5A 015639 0017 Rev. 00

TÜV SÜD Product Service GmbH • Zertifizierstelle • Ridlerstraße 65 • 80339 München • Deutschland

TÜV®

13.4 EU Declaration of Conformity

13.4.1 Valid for level sensors GWG 23

AFRISO

Technik für Umweltschutz

Messen. Regeln. Überwachen.

EU - Konformitätserklärung
EU Declaration of Conformity / Déclaration EU de conformité / Declaratión de conformidad CE / Declaração de confirmidade CE / Deklaracja zgodności UE

CE

Formblatt FB 27 - 03

Name und Anschrift des Herstellers: AFRISO-EURO-INDEX GmbH, Lindenstraße 20, 74363 Güglingen
Manufacturer / Fabricant / Fabricante / Nome e endereço do fabricante / Producent:

Erzeugnis: Grenzwertgeber / Overfill prevention sensor / Limit indicator
Product / Produit / Producto / Produto / Produkt:

Typenbezeichnung: GWG 12, GWG 23
Type / Type / Tipo / Tipo / Typ:

Betriebsdaten: U ≤ 25 V DC, I ≤ 165 mA
Techn. Details / Caractéristiques / Características / Detalhes técnicos / Dane techniczne:

Wir erklären in alleiniger Verantwortung, dass das bezeichnete Erzeugnis mit den Vorschriften folgender Europäischer Richtlinien übereinstimmt:
We declare under our sole responsibility that the above mentioned product meets the requirements of the following European Directives:
Le produit mentionné est conforme aux prescriptions des Directives Européennes suivantes:
El producto indicado cumple con las prescripciones de las Directivas Europeas siguientes:
O produto indicado cumpre com as prescrições das seguintes Diretivas Europeias:
Wymieniony wyżej produkt spełnia wymagania następujących Dyrektyw Europejskich:

Elektromagnetische Verträglichkeit (2014/30/EU)
Directive Electromagnetic Compatibility / Directive compatibilité électromagnétique / Directiva compatibilidad electromagnética / Diretiva sobre compatibilidade eletromagnética / Dyrektywa kompatybilności elektromagnetycznej

EN 61000-6-3:2007+A1:2011+AC:2012; EN 61000-6-2:2005 (erfüllt auch / meets also EN 61000-6-2:2019)

Bauprodukte Verordnung (EU) Nr. 305/2011 + Nr. 574/2014
Construction Products Directive / directive sur les produits de construction / Reglamento de productos de construcción / Regolamento dei prodotti da costruzione / Rozporządzenie w sprawie wyrobów budowlanych

EN 13616:2004

RoHS-Richtlinie (2011/65/EU)
RoHS Directive / Directive RoHS / Directiva RoHS / Diretiva RoHS / Dyrektywa RoHS

EN IEC 63000:2018

Unterzeichner: Dr. Späth, Geschäftsführer Technik
Signed / Signataire / Firmante / Assinado por / Podpisał: *Technical Director / Diretor Técnico / Dyrektor Techniczny*

1. Juli 2021
Datum / *Date / Fecha / Data*

AFRISO-EURO-INDEX GmbH
Lindenstraße 20 • 74363 Güglingen
Tel. 07135 102-0 • www.afriso.de

Unterschrift / *Signature / Firma / Assinatura / Podpis*

Version: 3 Index: 5	AFRISO-EURO-INDEX GmbH D-74363 Güglingen	Seite 1 von 1

983000.50004.0613

13.4.2 Valid for level sensors GWG 23 Ex (yellow fitting)

AFRISO

Technik für Umweltschutz

Messen. Regeln. Überwachen.

EU - Konformitätserklärung
EU Declaration of Conformity / Déclaration EU de conformité / Declaratión de conformidad CE / Declaração de confirmidade CE / Deklaracja zgodności UE

CE

Formblatt FB 27 - 03

Name und Anschrift des Herstellers: AFRISO-EURO-INDEX GmbH, Lindenstraße 20, 74363 Güglingen
Manufacturer / Fabricant / Fabricante / Nome e endereço do fabricante / Producent:

Erzeugnis: Grenzwertgeber / Overfill prevention sensor / Limit indicator
Product / Produit / Producto / Produto / Produkt:

Typenbezeichnung: GWG 23 Ex (gelbe Armatur)
Type / Type / Tipo / Tipo / Typ:

Betriebsdaten: Gerätegruppe: II, Kategorie: 1G und 1/2G, $U_i \leq 25$ V DC, $I_i \leq 165$ mA, $P_i \leq 1$ W
Techn. Details / Caractéristiques / Características / Detalhes técnicos / Dane techniczne:

Wir erklären in alleiniger Verantwortung, dass das bezeichnete Erzeugnis mit den Vorschriften folgender Europäischer Richtlinien übereinstimmt:
We declare under our sole responsibility that the above mentioned product meets the requirements of the following European Directives:
Le produit mentionné est conforme aux prescriptions des Directives Européennes suivantes:
El producto indicado cumple con las prescripciones de las Directivas Europeas siguientes:
O produto indicado cumpre com as prescrições das seguintes Diretivas Europeias:
Wymieniony wyżej produkt spełnia wymagania następujących Dyrektyw Europejskich:

Elektromagnetische Verträglichkeit (2014/30/EU)
Directive Electromagnetic Compatibility / Directive compatibilité électromagnétique / Directiva compatibilidad electromagnética / Direttiva sobre compatibilidade eletromagnética / Dyrektywa kompatybilności elektromagnetycznej
EN 61000-6-2:2005+AC:2005 (erfüllt auch / meets also EN 61000-6-2:2019)
EN 61000-6-3:2007+A1:2011+AC:2012

Explosionsschutz-Richtlinie (2014/34/EU)
ATEX Directive / Directive ATEX / Directiva ATEX / Direttiva ATEX / Dyrektywa ATEX
EN IEC 60079-0:2018; EN 60079-11:2012; EN 60079-26:2015
EU-Baumusterprüfbescheinigung Nr.: TPS 21 ATEX 015639 0017 X
Benannte Stelle: TÜV SÜD Product Service GmbH, Ridlerstr. 65, 80339 München, Kennnummer 0123

Bauprodukte Verordnung (EU) Nr. 305/2011 + Nr. 574/2014
Construction Products Directive / directive sur les produits de construction / Reglamento de productos de construcción / Regolamento dei prodotti da costruzione / Rozporządzenie w sprawie wyrobów budowlanych
EN 13616:2004

RoHS-Richtlinie (2011/65/EU)
RoHS Directive / Directive RoHS / Directiva RoHS / Direttiva RoHS / Dyrektywa RoHS
EN IEC 63000:2018

Unterzeichner: Dr. Späth, Geschäftsführer Technik
Signed / Signataire / Firmante / Assinado por / Podpisał:
Technical Director / Diretor Técnico / Dyrektor Techniczny

20. September 2023
Datum / *Date / Fecha / Data*

Unterschrift / *Signature / Firma / Assinatura / Podpis*

AFRISO-EURO-INDEX GmbH Güglingen www.afriso.de

Version: 3 Index: 5	AFRISO-EURO-INDEX GmbH D-74363 Güglingen	Seite 1 von 1

995000 53004 06/13

13.5 Declaration of Performance (DoP)

AFRISO

Technik für Umweltschutz

Messen. Regeln. Überwachen.

CE

LEISTUNGSERKLÄRUNG (DoP)

Nr.: GWG-EU-BauPVO-DE-2013

nach Verordnung (EU) Nr. 305/2011 DES EUROPÄISCHEN PARLAMENTS UND DES RATES vom 9. März 2011 zur Festlegung harmonisierter Bedingungen für die Vermarktung von Bauprodukten und zur Aufhebung der Richtlinie 89/106/EWG des Rates

1. Eindeutiger Kenncode des Produkttyps:

   Grenzwertgeber

   Überfüllsicherung Typ B – Bauart B1 (Stromschnittstelle)

   (Überfüllsicherung ohne Schließeinrichtung)

2. Typen-, Chargen- oder Seriennummern oder andere Kennzeichen zur Identifikation des Bauprodukt nach Artikel 11 Absatz 4:

   Grenzwertgeber Typ GWG 12 und Typ GWG 23

3. Vom Hersteller vorgesehener Verwendungszweck des Bauprodukts nach der anwendbaren harmonisierten technischen Spezifikation:

   Grenzwertgeber zum Einbau in unterirdischen oder oberirdischen ortsfesten Tanks für flüssige Brenn- und Kraftstoffe als Teil einer Überfüllsicherung.

4. Name, eingetragener Handelsname oder eingetragene Marke und Kontaktanschrift des Herstellers gemäß Artikel 11 Absatz 5:

   AFRISO

   AFRISO-EURO-INDEX GmbH

   Lindenstraße 20, 74363 Güglingen

   Tel.-Nr.: +49 7135 102-0 Fax: +49 7135 102 212

   e-Mail: info@afriso.de www.afriso.de

5. Gegebenenfalls Name und Kontaktanschrift des Bevollmächtigten, der mit den Aufgaben nach Artikel 12 Absatz 2 beauftragt ist:

   N.A.

6. System zur Bewertung und Überprüfung der Leistungsbeständigkeit des Bauprodukts nach Anhang V der Bauprodukteverordnung:

   System 3

7. Im Falle der Leistungserklärung, die ein Bauprodukt betrifft, das von einer harmonisierten Norm erfasst wird:

   TÜV Nord Systems GmbH & Co KG, Competence Center Tankanlagen, Große Bahnstraße 31, 22525 Hamburg, Deutschland
   Kennummer des notifizierten Prüflabors: 0045

   hat eine Typprüfung (auf Grundlage der vom Hersteller gezogenen Stichprobe) nach dem System 3 vorgenommen und folgenden Prüfbericht ausgestellt:

   Nummer des Prüfberichtes: 8110 668 529

Seite 1 von 2

993000 50004 06/13

AFRISO

Technik für Umweltschutz

Messen. Regeln. Überwachen.

CE

LEISTUNGSERKLÄRUNG (DoP)

Nr.: GWG-EU-BauPVO-DE-2013

nach Verordnung (EU) Nr. 305/2011 DES EUROPÄISCHEN PARLAMENTS UND DES RATES vom 9.März 2011 zur Festlegung harmonisierter Bedingungen für die Vermarktung von Bauprodukten und zur Aufhebung der Richtlinie 89/106/EWG des Rates

8. Erklärung Leistung:

Wesentliche Merkmale	Leistung	Harmonisierte technische Spezifikation
Signalbereitstellung über Niveau L_1	bestanden	EN 13616:2004
Signalbereitstellung unter Niveau L_1	bestanden	
Dauerhaftigkeit gegen Temperatur	bestanden	
Dauerhaftigkeit gegen Chemikalienangriff	bestanden	
Dauerhaftigkeit bei Betriebszyklen	bestanden	

9. Die Leistung des Produkts gemäß den Nummern 1 und 2 entspricht der erklärten Leistung nach Nummer 8.

Verantwortlich für die Erstellung dieser Leistungserklärung ist allein der Hersteller gemäß Nummer 4.

Unterzeichnet für den Hersteller und im Namen des Herstellers von:

Dr. J. Späth — Geschäftsführer Technik

(Name und Funktion)

Güglingen, 1.Juli .2021

AFRISO-EURO-INDEX GmbH
Industriestraße 20 • 74363 Güglingen
Tel. +49 7135 102-0 • www.afriso.de

Seite 2 von 2

963000.50004.09/13

13.6 CE Marking

CE

0045

AFRISO-EURO-INDEX GmbH, Lindenstr. 20
74363 Güglingen, Germany

13

GWG-EU-BauPVO-DE-2013

EN 13616:2004

Überfüllsicherung ohne Schließeinrichtung
Typ: GWG 23

für die Verwendung in unter- oder oberirdischen, drucklosen, ortsfesten Tanks für flüssige Brenn- und Kraftstoffe als Teil einer Überfüllsicherung.

Signal oberhalb Füllhöhe L_1	bestanden
Signal unterhalb Füllhöhe L_1	bestanden
Beständigkeit gegenüber:	
- Temperatur	bestanden
- chemischer Beanspruchung durch flüssige Brenn- und Kraftstoffe	bestanden
- Betriebszyklen	bestanden